APPENDIX D
ELECTRICAL
FIXTURES

UNIVERSE COLLECTION®

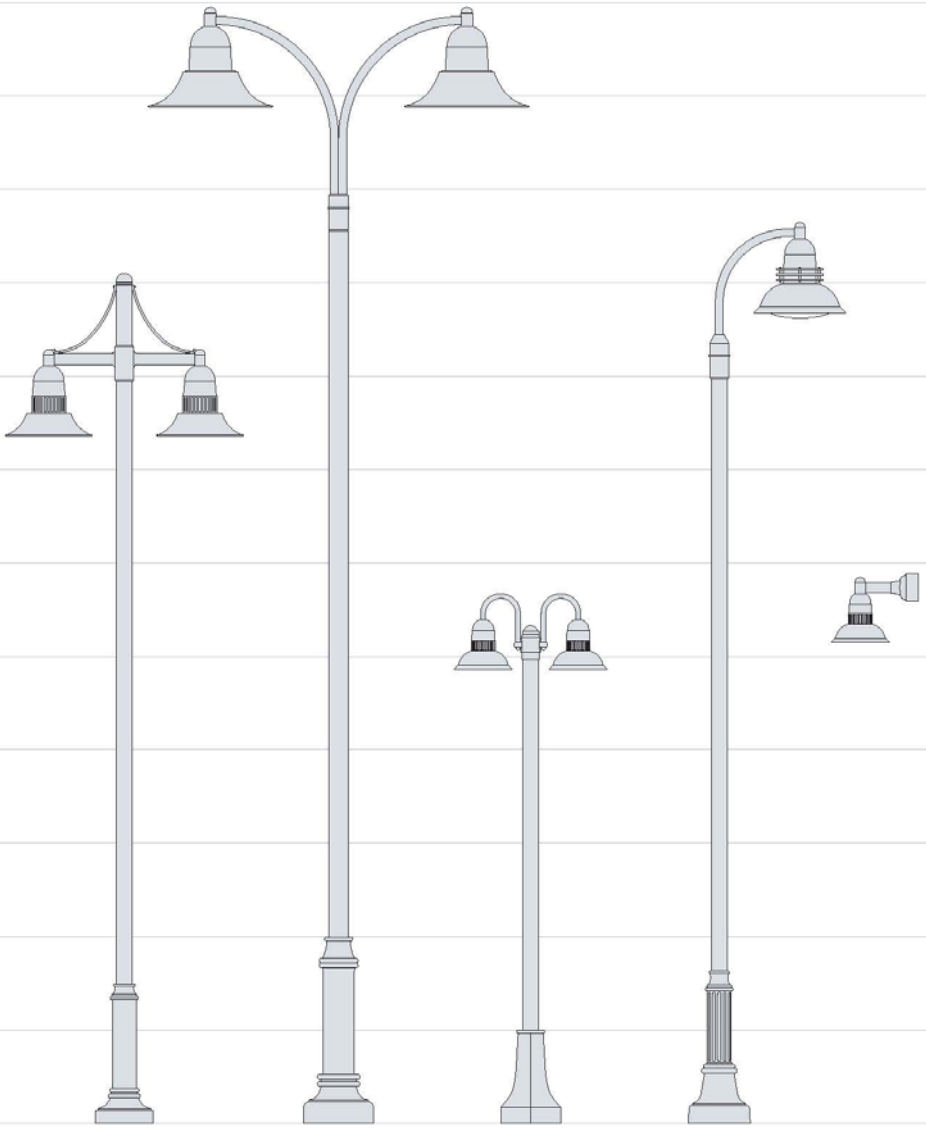

HEAD	2-UCM	2-UCL	2-UCS	UCM	UCS
ELEMENT	VSL	•	VSL	SR	VSL
HOOD	FLR	FLR	BEL	BEL	BEL
ARM	SLA20B-2	SLA24(5)-2	PCVT	SLA24	WST
POLE	DB6-4R16	DB10-5R20	PR4-4R10,BC5-4	DB12-4R16	•

21 ARCHITECTURAL AREA LIGHTING

UNIVERSE COLLECTION®

Fixtures can be pole, wall and pendant mounted.

HEAD

4 WINDOWS

SOLID RINGS

VERTICAL SLOTS

LUMINOUS ELEMENTS Optional elements to add visibility and interest to fixtures.

ANGLED

FLARED

HOODS Available in painted aluminum, natural copper and stainless steel.

HIGH PERFORMANCE CUT OFF REFLECTOR SYSTEM

OPAL ACRYLIC LENS

GLASS REFRACTOR

OPTICAL SYSTEMS

ARCHITECTURAL AREA LIGHTING 10

UNIVERSE COLLECTION®

Modular Design

The heart of the Universe Collection® is a modular fixture system that enables a mixture of luminous elements, shade shapes and optical systems. For example, the UCM series can be configured into over a hundred unique fixtures for a luminaire that truly complements your site design. A large palette of AAL arms and poles let you further refine the design.

The modular system also allows you to easily add or change the luminous elements, shades or optical systems.

LUMINOUS RINGS

STRAIGHT

BELL

The Universe hoods can be specified with natural copper or stainless steel hoods to complement other design elements on the project.

SKIRTED BELL

11

ARCHITECTURAL AREA LIGHTING

UNIVERSE COLLECTION®

Illumination Effects

One of four modular, luminous elements can be specified to softly illuminate the shade and add visual interest to the overall design.

The opal lens model (OAL) is well suited for low mounting heights to softly illuminate general pedestrian areas.

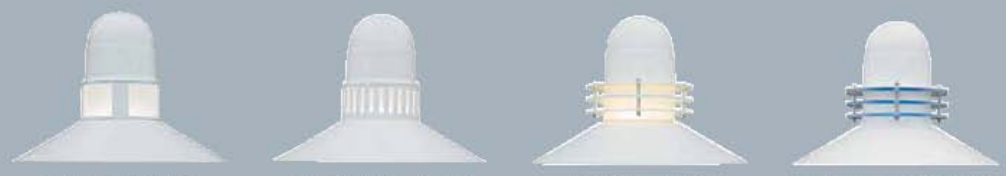

WND 4 WINDOWS | VSL VERTICAL SLOTS | SR SOLID RINGS | LUM LUMINOUS RINGS

The luminous ring (LUM) comes standard with a diffused inner lens. An optional colored lens adds edge lit color to the rings when illuminated.

BL BLUE
RD RED
GN GREEN

UCM LUM (BLUE) STR OAL SLA 4 PR4-4R10

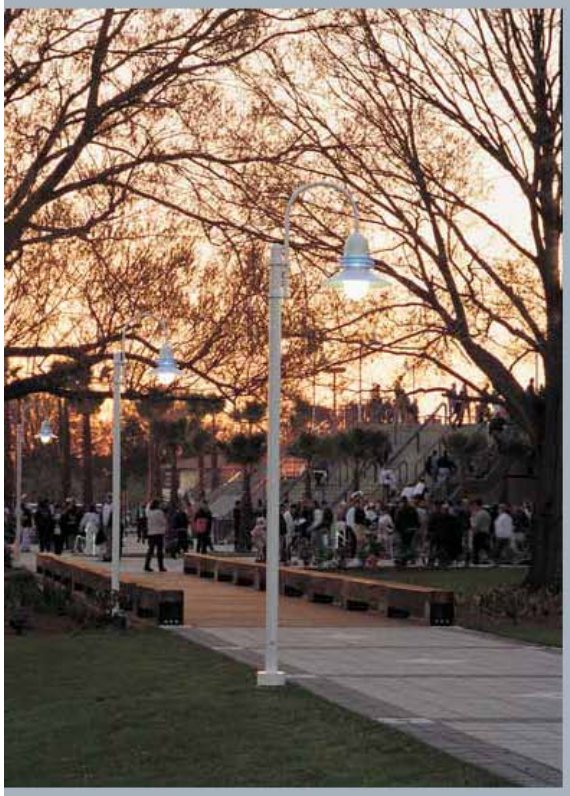

UCM LUM STR OAL SLA 17 PR4-4R8

ARCHITECTURAL AREA LIGHTING 12

UNIVERSE COLLECTION®

Effective Illumination

Full cutoff reflectors meet local light control ordinances and dark sky initiatives

UCL

- Pulse start Metal halide + HPS lamps 150 to 400 watts
- Optics rotate on 90° centers
- EISA compliant

UCM

- Metal halide + HPS lamps 50 to 150 watts
- Optics rotate on 90° centers
- T-6 ceramic metal halide lamps can be used to ensure color accuracy and consistency.
- Electronic ballasts are also available to improve lamp color stability.
- EISA compliant

FOUR LIGHT PATTERNS

The four reflectors provide maximum flexibility to precisely illuminate pedestrian areas, streets, and complete project site lighting. The horizontal reflector system is available in four light distributions for maximum efficiency and precise placement of the light.

The reflector systems meet IES standards for full cutoff type optics to address requirements for glare control, light trespass and light pollution. Light trespass is eliminated with the use of an optional factory installed house side shield.

IDA approved

FOUR LIGHT PATTERNS

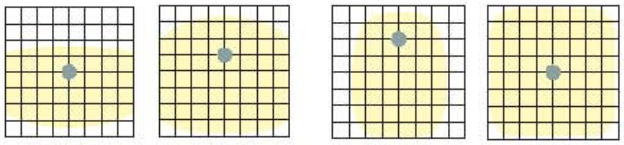

TYPE 2 TYPE 3 TYPE 4 TYPE 5

Full cutoff shield (UCS only) lowers the hood to cover the opal lens, providing IES full cutoff classification, meaning zero light is emitted above 90 degrees.

Optional flat tempered glass lens on the UCM (FTG option).

Optional flat tempered lightly diffused glass lens on the UCM (FLD option).

Internal sleeve blocks the light emitted from the Luminous Element option. This provides full cutoff photometrics, eliminating any light above 90 degrees (with flat glass lens).

13

ARCHITECTURAL AREA LIGHTING

UNIVERSE COLLECTION®

Egress Lighting

Egress lighting codes require an illuminated path for occupants to get a safe distance from the building. The Universe Collection® is an aesthetic solution to the task. In conjunction with the proper circuitry, the following options can be implemented to provide egress lighting.

- QRS - The quartz restrike option uses an electronic controller to energize a quartz lamp, providing illumination while the HID lamp is started or restored to full brightness.
- QL - An auxiliary quartz lamp socket is wired to a separate emergency power circuit.
- Induction Lamp - This is an instant on and instant restart type lamp.
- Compact Fluorescent Lamp - This is an instant on and instant restart type lamp. These can be wired to an auxiliary backup power supply for emergency lighting.

UCM SR STR H3 SLA 20A - POLE AND WALL MOUNT

UCL LUM ANG H3 WMA 20

UCS LUM ANG PMS

ARCHITECTURAL AREA LIGHTING 14

UNIVERSE COLLECTION®

Induction Lamp

An induction lighting system is available for the UCM-medium and UCL-large scale fixtures as well as the UCB bollard. The system features long life, excellent color rendering and "instant on" characteristics compared to HID lamps. The electronic generator enhances reliability for consistent light output under variable operating conditions. The life expectancy of the Induction Lighting System is 100,000 hours (27 years at 10 hours per night).

The IL-55 lamp output is 3500 initial lumens, and is comparable to a 50 watt metal halide or HPS lamp system. The IL-85 lamp output is 6000 initial lumens, which is comparable to a 70 watt HID lamp. The IL-165 lamp output is 12000 initial lumens, and can replace a 150 HID lamp.

The system is available in 3000°K and 4000°K color temperatures. The photo below is the UCM with a reflector, flat glass lens and IL-55. The illumination is even with excellent color rendering which increases the eyes ability to "see" at night.

- Maintenance free operation saves the cost of frequent relamping.
- Excellent color rendition throughout the life of the lamp.
- Instant on for security and emergency lighting applications.

15 ARCHITECTURAL AREA LIGHTING

UNIVERSE COLLECTION®

Engineered for perfect installation

The key to a successful installation is an easy straight forward installation process that ensures consistent, repeatable setups.

The Universe Collection® has retained the quick foolproof installation process that makes every installation look perfect.

SECURE CONNECTIONS

These fixtures have a large cross section requiring a strong connection to avoid loosening connections from wind and vibration. The UCM and UCL feature a three point connection between the arm and fixture head to ensure a secure connection. The connection is sealed with a silicone pad. Just set the arm over the fixture and attach it with the three supplied stainless steel bolts.

The small scaled UCS fixtures are factory welded to the arm.

ONE PIECE, PREWIRED ARMS

All arms are unitized, one piece designs for structural rigidity and easy installation. Just slip the arm over the pole and tighten the set screws. AAL arms are prewired with a quick disconnect for easy attachment to the fixture. The multitap ballast is installed and wired at the factory to speed the installation process.

16

UNIVERSE COLLECTION®

Engineered for an easy installation

AAL arms are designed with a slip over hub that allows proper arm alignment no matter how the pole is orientated when installed. If the poles are not installed precisely, the arms can be swiveled to ensure all the arms, along a street or path, line up visually.

UCM LUM STR H3 SLA 17 PR4-4R16

17 ARCHITECTURAL AREA LIGHTING

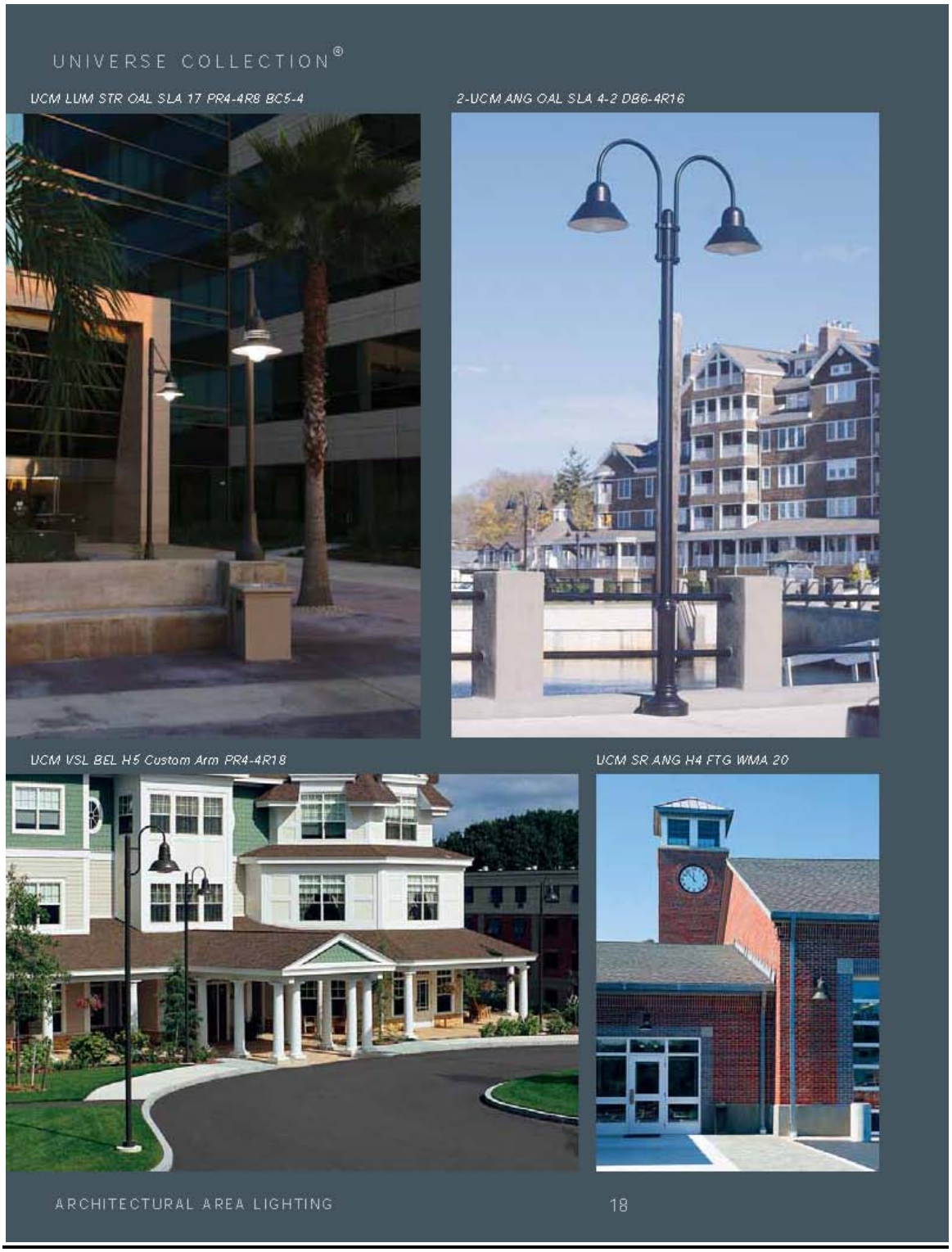
UNIVERSE COLLECTION®
UCM LUM STR OAL SLA 17 PR4-4R8 BC5-4
2-UCM ANG OAL SLA 4-2 DB6-4R16
UCM VSL BEL H5 Custom Arm PR4-4R18
UCM SR ANG H4 FTG WMA 20
ARCHITECTURAL AREA LIGHTING
18

UNIVERSE COLLECTION®

UCS SR STR WCV

UCL SR ANG H5 SLA 4 PR4-4R12

UCM VSL FLR OAL WMA 17

UCM LUM STR H4 SLA 4 PR4-4R14 BC1-4

19

ARCHITECTURAL AREA LIGHTING

UNIVERSE COLLECTION®

UCM	UCS	UCM	UCM	UCM	UCL	HEAD
LUM	SR	LUM	LUM	•	WND	**LUMINOUS**
STR	STR	ANG	SKB	BEL	ANG	**HOOD**
WMA17	PCVS	PMS	PMR	SLA7	SLA17(5)	**ARM**
•	PR3-3R8	•	C4P-14	DB3-4R16,BBS4-24	PR5-5R20, BC6-5	**POLE**

ARCHITECTURAL AREA LIGHTING 20

UCM

Medium Scale

The medium scaled model is designed for pedestrian areas, building perimeters, streetscapes, store fronts, or atriums

- Pole + Wall + Pendant mounting
- Full cutoff reflector system in four distributions for specific illumination tasks
- Opal acrylic lens, type five distribution for soft, general lighting, 100 watts max
- Glass refractor lens, type three or five distribution for general lighting
- 50, 70,100, or 150 watt metal halide, including pulse start
- 50, 70, 100, or 150 watt high pressure sodium
- IL-55 and IL-85 induction lamp system

2-UCM LUM STR H5
SLA20C-2 PR4-4R14 BC5-4

ARCHITECTURAL AREA LIGHTING

UCS
Small Scale

The small scaled model is designed for pedestrian areas or affixed to the building and is appropriately used for exterior or interior applications

- Pole + Wall + Pendant mounting
- Opal glass lens, type five distribution for soft, general lighting
- Available with full cutoff
- 26, 32 or 42 watt compact fluorescent
- 50 or 70 watt metal halide including 70 watt T6 ceramic MH
- 50 or 70 watt high pressure sodium

UCS SR STR WCV

ARCHITECTURAL AREA LIGHTING

UCS
SMALL SCALE

HOW TO ORDER

Start with the Universe Small head, standard with an opal glass lens

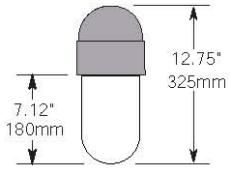

Add the vertical dimensions for the luminous element and hood

1. Select a luminous element, if desired.
2. Select a hood style.
3. Select a lamp ballast.
4. Specify a standard AAL color RAL color, or custom color (sample color chip required at time of ordering).
5. Choose any desired options.
6. Select an arm for pole or wall mounting designed exclusively for the smaller scale of the UCS.

UCS VSL STR PMS

UCS FLR PCVS

UCS SR STR WST STS

Ordering Examples

	LUMINOUS			LAMP	HOOD			
FIXTURE	ELEMENT	HOOD	OPTICS	BALLAST	COLOR	FINISH	OPTIONS	ARM	POLE
UCS	-	FLR	50MH	DGN	-	FCO	PCVS	PR3-3R8-125
UCS	LUM	BEL	42CF	BLK	COP	-	WCV	-
2-UCS	SR	ANG	70MH	AWT	-	-	PSTT	PR4-4R12-125
UCS	VSL	STR	50MH	MAL	STS	PMS	-	-

Weight: 16 lbs. **EPA: .62** **IP RATING: 65**

UCS UNIVERSE COLLECTION

1 Luminous Element

WND 4 WINDOWS

Cast frame
5.25"/130mm DIAMETER
2.75 in/70mm HIGH

SR SOLID RINGS

Aluminum rings
7.25"/185mm DIAMETER
3"/75mm HIGH

VSL VERTICAL SLOTS

Cast frame
5.25"/130mm DIAMETER
2.75"/70mm HIGH

LUM LUMINOUS RINGS

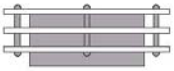

Edge lit acrylic rings
7.25"/185mm DIAMETER
1.5"/32mm HIGH

2 Hood

ANG ANGLED SHADE

14"/355mm DIAMETER
4.75"/120mm HIGH

BEL BELL SHADE

15"/380mm DIAMETER
4.75"/120mm HIGH

FLR FLARED SHADE

15"/380mm DIAMETER
4.75"/120mm HIGH

STR STRAIGHT SHADE

16"/405mm DIAMETER
3.12"/80mm HIGH

SKB SKIRTED BELL SHADE

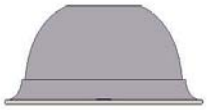

15"/380mm DIAMETER
7.25"/185mm HIGH

3 Lamp/Ballast

CF
Compact fluorescent, electronic 120 thru 277 volt ballast. -18°C starting temp. Use 4-pin 26, 32 or 42 watt lamp.

50MH
50 watt metal halide 120/277 volt ballast. Use medium base,ED-17 lamp.

70MH
70 watt metal halide 120/208/240/277 volt ballast. Use medium base, ED-17 lamp.

70MHT6
70 watt metal halide 120/277347 volt ballast. Use G12 base, T-6 ceramic lamp.

50HPS
50 watt high pressure sodium 120/277 volt ballast. Use medium base, ED-17 lamp.

70HPS
70 watt high pressure sodium 120/208/240/277 volt ballast. Use medium base, ED-17 lamp.

All ballasts are factory wired for 277 volts, unless specified. Lamps not included.
For pole mounted fixtures, the ballast is located in the arm.
All applicable ballasts are EISA compliant.

4 Color/Hood

All standard AAL colors available. For RAL & custom colors, please submit a four-digit RAL number or color chip for custom colors.
See page 25 for Hood finishes.

5 Options

347 120/240/347 volt ballast for HID lamp/ballast. 347 volt only for the 50MH and 50HPS.

SLC Internal sleeve to block off the light from the lens when a Luminous Element option is chosen. Painted to match the fixture color.

FCO Full cutoff shield. **Not available with luminous element or SKB.** (SKB without luminous element has full cutoff as standard.)

ARCHITECTURAL AREA LIGHTING 28

UCS UNIVERSE COLLECTION

6 UCS Mounting Configurations

POLE MOUNT

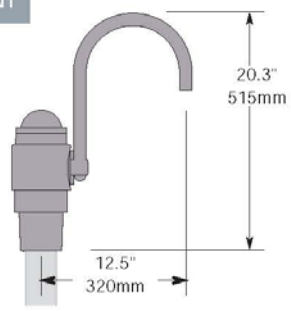

PCVS Curved arm, fits over 3"/75mm pole.

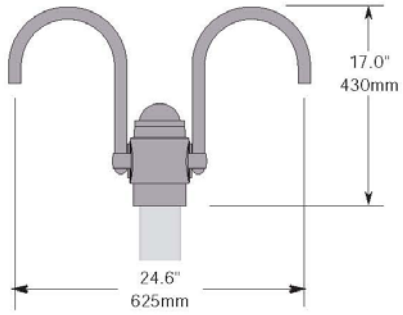

PCVT Twin curved arms, fits over 4"/100mm pole.

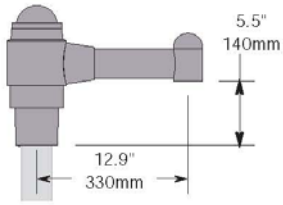

PSTS Straight arm, fits over 3"/75mm pole.

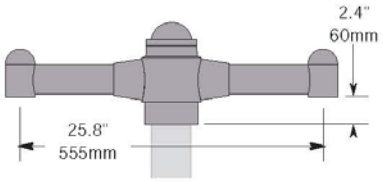

PSTT Twin straight arms, fits over 4"/100mm pole.

WALL MOUNT

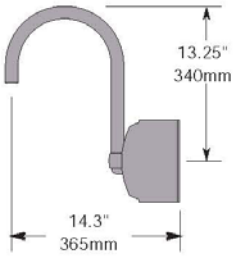

WCV Wall mount-curved arm

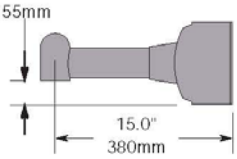

WST Wall mount-straight arm

WALL PLATE DIAMETER
7"/178mm
BOLT CIRCLE
5"/127mm

PENDANT

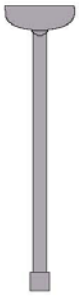

PMS Pendant mount includes a 48"/1220mm stem fits over a standard octagonal J-box. *Remote ballast required.*

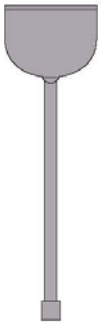

SBE Pendant mount includes a 48"/1220mm stem and surface mounted ballast enclosure

29 ARCHITECTURAL AREA LIGHTING

UCM UNIVERSE COLLECTION

4 Lamp/Ballast

PL57
57 watt compact fluorescent 120 thru 277 volt ballast. Use GE F57QBX lamp. -10°C minimum start temp.

50MH
50 watt metal halide 120/277 volt ballast. Use medium base, ED-17 lamp.

70MH
70 watt metal halide 120/208/240/277 volt ballast. Use medium base, ED-17 lamp.

70MHEB
70 watt electronic metal halide 120 thru 277 volt ballast. Use medium base, ED-17 lamp.

70MHT6
70 watt electronic metal halide 120/277/347 volt ballast. Use G12 base, T-6 ceramic lamp.

70MHT6EB
70 watt metal halide 120 thru 277 volt ballast. Use G12 base, T-6 ceramic lamp.

100MH
100 watt metal halide 120/208/240/277 volt ballast. Use medium base, ED-17 lamp.

100MHEB
100 watt electronic metal halide 120 thru 277 volt ballast. Use medium base, ED-17 lamp.

150MHEB
150 watt electronic metal halide 120 thru 277 volt ballast. Use medium base, ED-17 lamp.

150PSMH
Pulse start 150 watt metal halide 120/208/240/277 volt ballast. Use medium base, ED-17 lamp.

150PSMHT6
Pulse start 150 watt metal halide 120/208/240/277 volt ballast. Use G12 base, T-6 ceramic lamp.

150MHT6EB
150 watt electronic metal halide 120 thru 277 volt ballast. Use G12 base, T-6 ceramic lamp.

175PSMH
Pulse start 175 watt metal halide 120/208/240/277 volt ballast. Use medium base, ED-17 lamp. For OAL & GR3/GR5 only.

50HPS
50 watt high pressure sodium 120/277 volt ballast. Use medium base, ED-17 lamp.

70HPS
70 watt high pressure sodium 120/208/240/277 volt ballast. Use medium base, ED-17 lamp.

100HPS
100 watt high pressure sodium 120/208/240/277 volt ballast. Use medium base, ED-17 lamp.

150HPS
150 watt high pressure sodium 120/208/240/277 volt ballast. Use medium base, ED-17 lamps.

IL-55
55 watt induction lamp system with high frequency generator. Specify 120, 208, 240 or 277 volt ballast. -25°C start temp. OAL only. Less luminous elements.

IL-85
85 watt induction lamp system with high frequency generator. Specify 120, 208, 240 or 277 volt ballast. -25°C start temp. OAL only. Less luminous elements.

All ballasts are factory wired for 277 volts, unless specified. Lamps not included (except IL option).

All applicable ballast are EISA compliant.

5 Color

All standard AAL colors available. For RAL & custom colors, please submit a four-digit RAL number or color chip for custom colors.

6 Hood Finishes

The straight and flared hoods can be clad with natural copper, or brushed stainless steel. Both are unfinished to develop a patina over time.

STS
STAINLESS STEEL

COP
NATURAL COPPER

7 Options

QRS Restrike controller and T-4 mini-can socket. Not required with electronic ballast. (Lamp wattage not to exceed ballast wattage).

QL Socket for T-4 mini-can lamp, field wired to a separate circuit. (Lamp wattage not to exceed ballast wattage).

347 120/240/347 volt ballast for HID lamp/ballast. 347 volt only for 50 watt MH and 50 watt HPS.

SLC Internal sleeve to block light from the lens when a Luminous Element is chosen: WND, SR, VSL or LUM

HSS House side shield, factory installed. Not for Type 5.

FTG Flat glass lens instead of standard sag glass. Reflector models only.

FLD Lightly diffused finish on flat glass lens. Reflector models only.

RCK Rock Guard painted black, attached to door frame. Not for PMR.

8 Mounting

Arms are on page 40-45
Poles are on page 46-49

PM Post top Yoke Mount for use with the OAL or GR3/5 optics. Slips over a 4"/100mm pole. Secured with 6 stainless steel set screws.

PMR Post top Yoke Mount for use with Reflector optics. Slips over a 4"/100mm pole. Secured with 6 stainless steel set screws.

PMS Pendant mount with 48"/1220 mm and canopy with swivel. Stem and canopy painted to match the fixture.

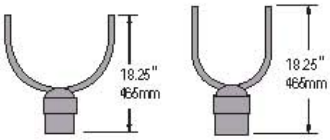

33 ARCHITECTURAL AREA LIGHTING

UCM
MEDIUM SCALE

HOW TO ORDER

Start with the Universe Medium head.

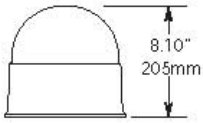

UCM LUM SKB H3

1. Select a luminous element if desired.
2. Select a hood style.
3. Choose the optical assembly for your application.
4. Select a lamp ballast.
5. Specify a standard AAL color shown, RAL color, or custom color (sample color chip required at time of ordering).
6. Choose any desired hood finish.
7. Choose any other options
8. Select mounting

UCM VSL STR

Ordering Examples

	LUMINOUS			LAMP		HOOD			
FIXTURE	ELEMENT	HOOD	OPTICS	BALLAST	COLOR	FINISH	OPTIONS	ARM	POLE
UCM	LUM-BL	BEL	H3	100MH	BLK	COP	FLD	SLA20A	DB6-4R14-125
UCM	SR	ANG	GR5	50MH	MAL	-	-	WMA8	-
UCM	VSL	STR	OAL	150MH	CTR	-	-	PM	2P-14
UCM	WND	FLR	H5	IL-85	AWT	STS	-	SLA17	PR4-4R14

Weight: 34 lbs. EPA: 1.14 IP RATING: 65

31 ARCHITECTURAL AREA LIGHTING

UCM UNIVERSE COLLECTION

1 Luminous Element

WND 4 WINDOWS
Cast frame with a diffused acrylic lens

8.75"/225mm DIAMETER
4.17"/105mm HIGH

SR SOLID RINGS

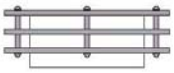

Cast rings with a diffused acrylic lens
12"/305mm DIAMETER
4.4"/110mm HIGH

VSL VERTICAL SLOTS

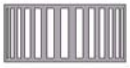

Cast frame with a diffused acrylic lens
8.75"/225mm DIAMETER
4.17"/105mm HIGH

LUM LUMINOUS RINGS

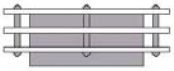

Edge lit acrylic rings with a diffused inner acrylic lens
12"/305mm DIAMETER
4.4"/110mm HIGH

LUMINOUS RING COLORS
An internal lens can be added for color on the ring edges when illuminated.

BL BLUE
RD RED
GRN GREEN

2 Hood

ANG ANGLED SHADE

20"/508mm DIAMETER
6.5"/165mm HIGH

BEL BELL SHADE

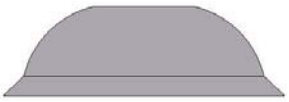

24"/610mm DIAMETER
8"/205mm HIGH

FLR FLARED SHADE

22"/560mm DIAMETER
6"/150mm HIGH

STR STRAIGHT SHADE

24"/610mm DIAMETER
4.5"/115mm HIGH

SKB SKIRTED BELL SHADE

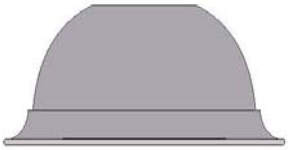

24"/610mm DIAMETER
11.75"/300mm HIGH

3 Optics

H2 TYPE 2 REFLECTOR
H3 TYPE 3 REFLECTOR
H4 TYPE 4 REFLECTOR
H5 TYPE 5 REFLECTOR
Reflector with cast door and standard sag glass lens

OPTIONS FOR REFLECTOR OPTICS

FTG FLAT GLASS LENS
FLD FLAT GLASS WITH LDL FINISH
HSS HOUSE SIDE SHIELD factory installed (not for Type 5)
RCK ROCK GUARD factory installed (not for PMR option)

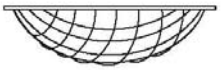

OAL OPAL ACRYLIC LENS

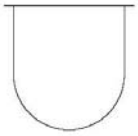

8"/205mm DIAMETER
9"/230mm HIGH
MAXIMUM 100 WATTS HID

GR3 TYPE 3 GLASS REFRACTOR
GR5 TYPE 5 GLASS REFRACTOR

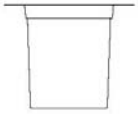

Glass Refractor
6.5"/165mm DIAMETER
6"/150mm HIGH

ARCHITECTURAL AREA LIGHTING 32

PHOTOMETRY

UNIVERSE COLLECTION®

UNIVERSE LARGE

	LUMENS	A
250 PSMH, POMB	21,850	0.78
400 PSMH, POMB	40,000-PH	1.43
150 HPS	16,000-GE	0.57
250 HPS	28,000-GE	1
400 HPS	50,000-P	1.79

The values below are in initial footcandles. Discount values to account for light losses due to voltage, temperature and atmospheric variations which affect light output.

To substitute another lamp in the isocandle charts below, multiply the chart values by the lamp conversion factor on the left. Mounting height is to the lamp center.

All testing performed by a certified independent laboratory. Photometry is available in IES formatted files at www.aal.net.

UCL-H3-250PSMH@16

16' MOUNTING HEIGHT
one grid square equals one mounting height

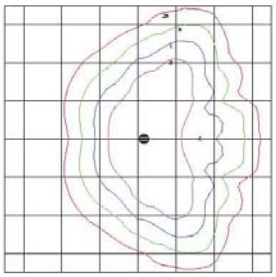

UCL-H3-320PSMH@25

16' MOUNTING HEIGHT
one grid square equals one mounting height

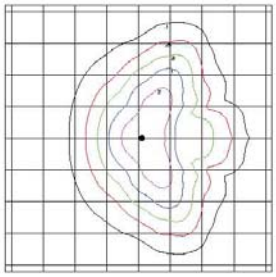

UCL-H5-250PSMH@16

16' MOUNTING HEIGHT
one grid square equals one mounting height

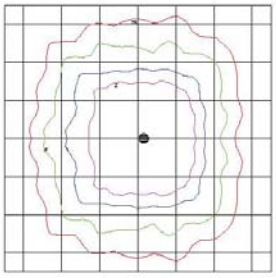

UCL-H5-350PSMH@25

16' MOUNTING HEIGHT
one grid square equals one mounting height

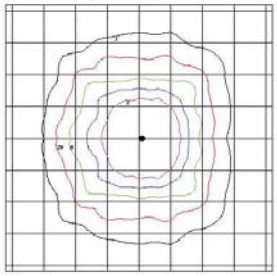

UCB 70MH

42" MOUNTING HEIGHT

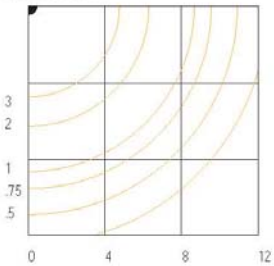

UCB-VSL 70MH

42" MOUNTING HEIGHT

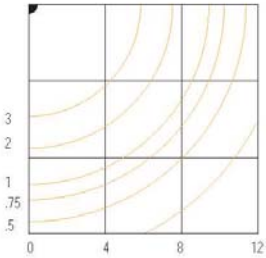

51

ARCHITECTURAL AREA LIGHTING

UNIVERSE COLLECTION

Specifications

INTERNAL BALLASTS

Multitap ballasts are prewired with quick disconnects for easy connection to the arm assembly. Access and removal of the assembly is tool-less.

REFLECTOR MODELS

The UCM (Medium scale) and UCL (Large scale) fixtures feature tempered glass lenses with one-piece memory retentive silicone gaskets to seal out dust and insects. The UCM features three point sealing of the door to ensure a tight seal. The hinged, die-cast aluminum doors feature tool-less access to the lamp and ballast.

The lens used for the luminous elements is molded diffused acrylic. The lens is sealed top and bottom with a one-piece memory retentive silicone gasket to assure a dust free seal.

OAL OPTICS

The UCS has an opal tempered glass lens that screws on to the fixture. The OAL optics on the UCM and UCL models have an opal acrylic lens with an aluminum collar. The lens is removed for lamp and ballast access by loosening three captive screws and twisting off the lens. The underside of the shades are finished in a high reflectance white.

39

ARCHITECTURAL AREA LIGHTING

UNIVERSE COLLECTION®

WALL MOUNTED ARMS

Wall mounted arms complement the pole mounted arms and are designed for both the UCM and UCL fixtures. The fixtures attach to the arms with the same 3 point mounting system. All arms are prewired with quick connectors for easy installation. Hardware for attaching to the wall surface is by others. The back plate mounting holes are .438" /11mm diameter. Use a minimum of 5/16-18 stainless steel fasteners. Seal the back plate to the wall surface with an appropriate silicone caulk.

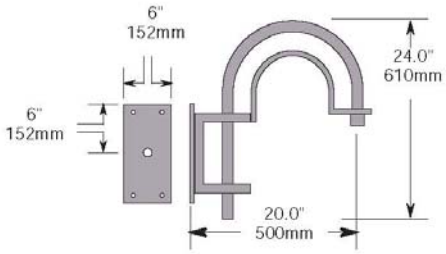

WMA 8 Backplate is 12"/305mm x 6"/150mm
WT: 10 lbs.

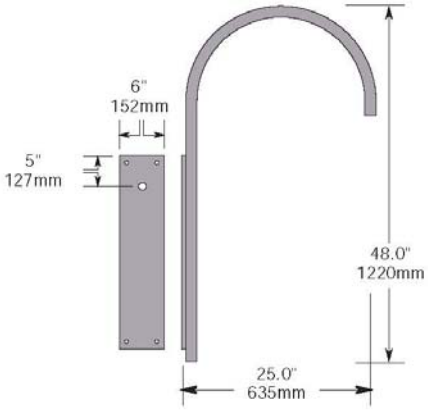

WMA 11 Backplate is 26"/660mm x 6"/150mm
WT: 10 lbs.

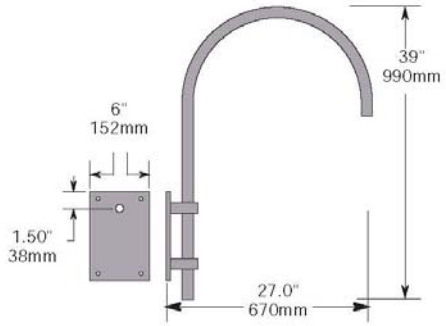

WMA 12 Backplate is 12"/305mm x 6"/150mm
WT: 12 lbs.

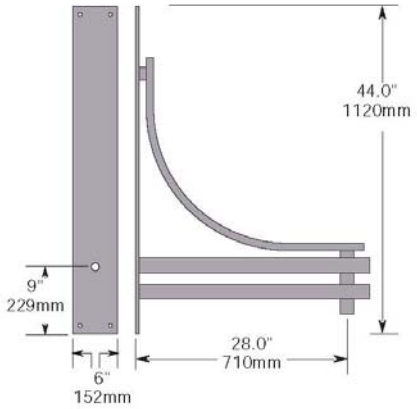

WMA 16 Backplate is 44"/112 0mm x 6"/150mm
WT: 22 lbs.

ARCHITECTURAL AREA LIGHTING 40

WALL MOUNTED ARMS

UNIVERSE COLLECTION®

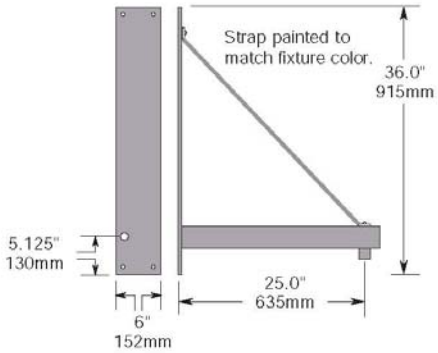

WMA 17 Backplate is 36"/915mm x 6"/150mm
WT: 15 lbs.

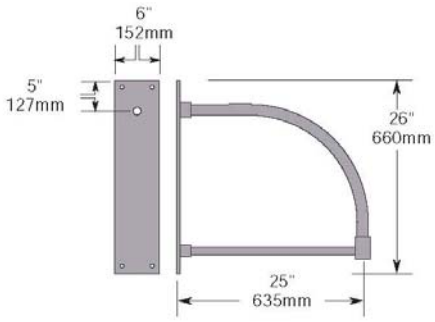

WMA 18 Backplate is 26"/660mm x 6"/150mm
WT:18 lbs.

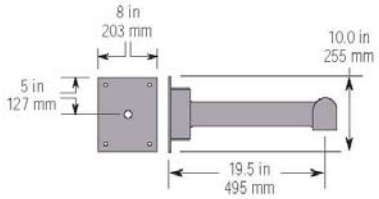

WMA 20 Backplate is 10"/255mm x 8"/205mm
WT: 12 lbs.

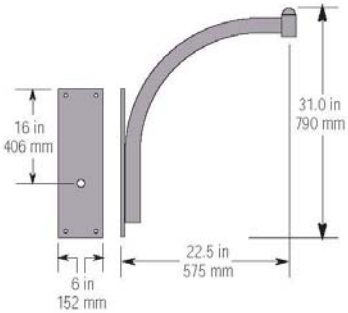

WMA 24 Backplate is 26"/660mm x 6"/150mm
WT: 12 lbs.

41

ARCHITECTURAL AREA LIGHTING

UNIVERSE COLLECTION®

POLE MOUNTED ARMS

All arms are unitized, one piece assemblies, prewired at the factory for easy, trouble-free installation.

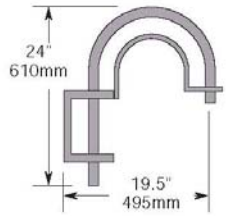

SLA 3 Bolts to 4"/100mm O.D. pole
WT: 8 lbs. EPA: .77

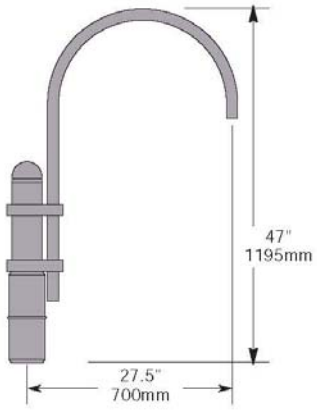

SLA 4 Slips over 4"/100mm O.D. pole.
WT: 14 lbs. EPA: 1.39

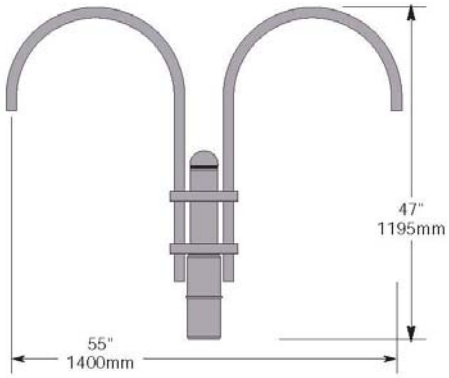

SLA 4-2 Twin arms, slips over 4"/100mm O.D. pole.
WT: 26 lbs. EPA: 2.10

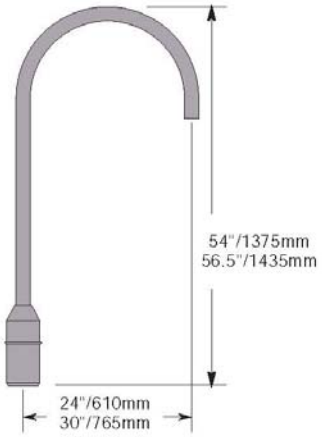

SLA 7 Slips over 4"/100mm O.D. pole.
WT: 9 lbs. EPA: 1.34
* **SLA 7(5)** Slips over 5"/127mm O.D. pole.
WT: 11 lbs. EPA: 1.73

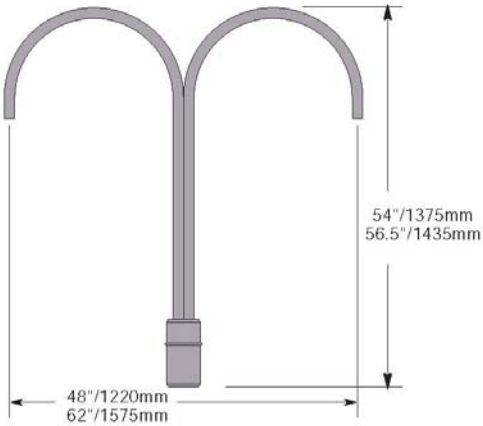

SLA 7-2 Twin arms, slips over 4"/100mm O.D. pole.
WT: 16 lbs. EPA: 2.34
***SLA 7(5)-2** Twin arms, slips over 5"/127mm O.D. pole.
WT: 18 lbs. EPA: 2.60

ARCHITECTURAL AREA LIGHTING

42

POLE MOUNTED ARMS

UNIVERSE COLLECTION®

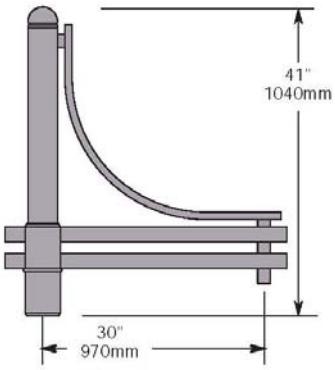

SLA 16 Slips over 4"/100mm O.D. pole.
WT: 18 lbs. EPA: 2.88

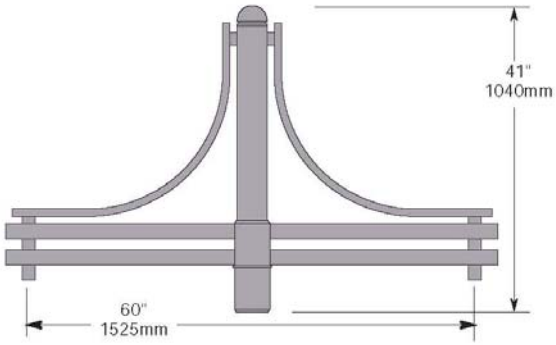

SLA 16-2 Twin arms, slips over 4"/100mm O.D. pole.
WT: 28 lbs. EPA: 4.38

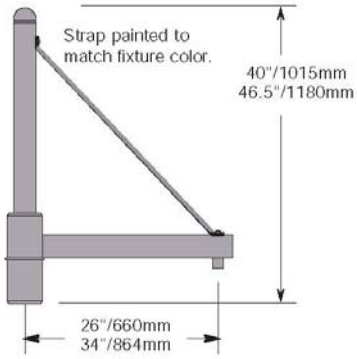

SLA 17 Slips over 4"/100mm O.D. pole.
WT: 18 lbs. EPA: 1.50
***SLA 17(5)** Slips over 5"/127mm O.D. pole.
WT: 24 lbs. EPA: 2.20

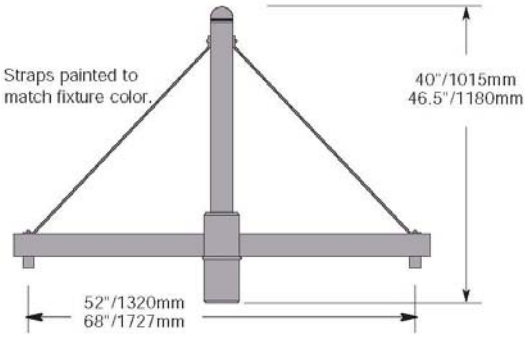

SLA 17-2 Twin arms, slips over 4"/100mm O.D. pole.
WT: 24 lbs. EPA: 2.05
***SLA 17(5)-2** Twin arms, slips over 5"/127mm O.D. pole.
WT: 33 lbs. EPA: 2.90

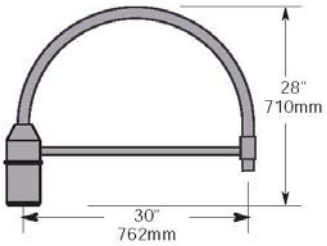

SLA 18 Slips over 4"/100mm O.D. pole.
WT: 12 lbs. EPA: .85

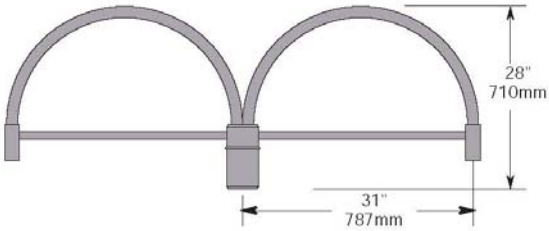

SLA 18-2 Twin arms, slips over 4"/100mm O.D. pole.
WT: 22 lbs. EPA: 1.59

43

ARCHITECTURAL AREA LIGHTING

UNIVERSE COLLECTION®

POLE MOUNTED ARMS

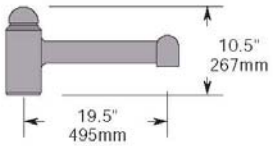

SLA 20 Slips over 4"/100mm O.D. pole.
WT: 10 lbs. EPA: .70

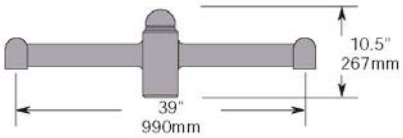

SLA 20-2 Twin arms, slips over 4"/100mm O.D. pole.
WT: 18 lbs. EPA: 1.25

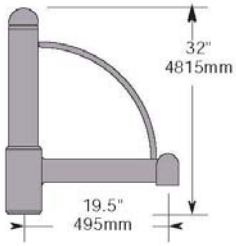

SLA 20A Slips over 4"/100mm O.D. pole.
WT: 15 lbs. EPA: 1.30

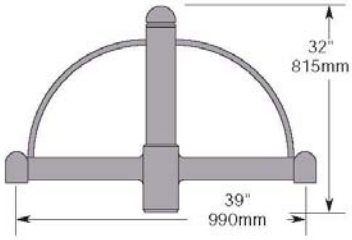

SLA 20A-2 Twin arms, slips over 4"/100mm O.D. pole.
WT: 26 lbs. EPA: 1.94

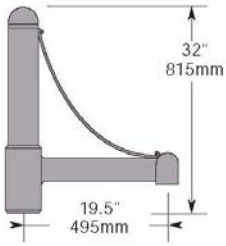

SLA 20B Slips over 4"/100mm O.D. pole.
WT: 14 lbs. EPA: 1.14

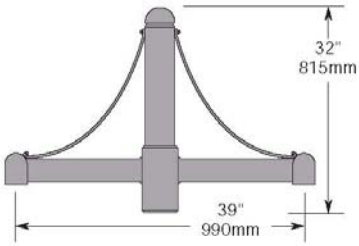

SLA 20B-2 Twin arms, slips over 4"/100mm O.D. pole.
WT: 24 lbs. EPA: 1.70

ARCHITECTURAL AREA LIGHTING 44

POLE MOUNTED ARMS

UNIVERSE COLLECTION®

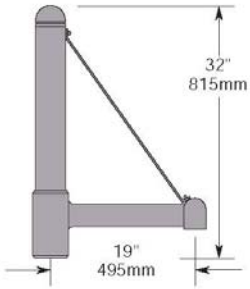

SLA 20C Slips over 4"/100mm O.D. pole.
WT: 15 lbs. EPA: 1.39

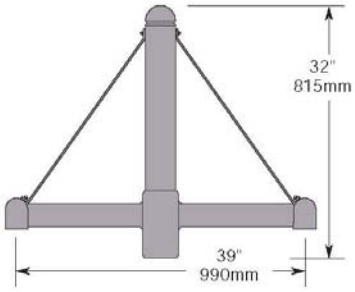

SLA 20C-2 Twin arms, slips over 4"/100mm O.D. pole.
WT: 26 lbs. EPA: 1.91

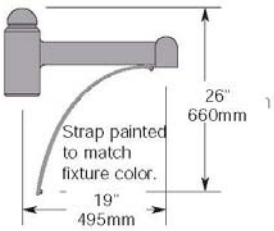

SLA 20D Slips over 4"/100mm O.D. pole.
WT: 12 lbs. EPA: .75

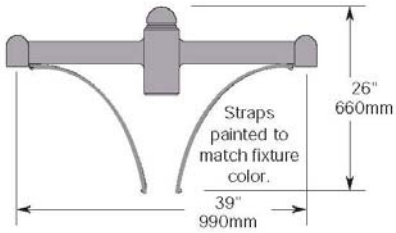

SLA 20D-2 Twin arms, slips over 4"/100mm O.D. pole.
WT: 21 lbs. EPA: 1.18

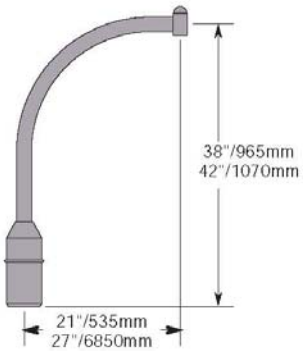

SLA 24 Slips over 4"/100mm O.D. pole.
WT: 9 lbs. EPA:.85
***SLA 24(5)** Slips over 5"/127mm pole.
WT: 11 lbs. EPA: 1.17

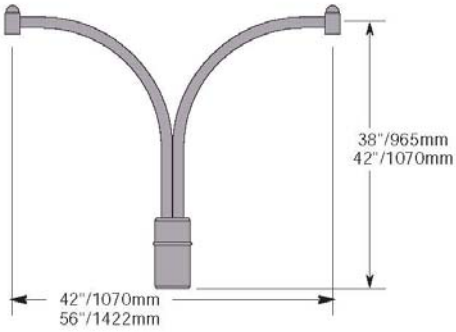

SLA 24-2 Twin arms, slips over 4"/100mm O.D. pole.
WT: 14 lbs. EPA: 1.59
***SLA 24(5)-2** Twin arms, slips over 5"/127mm pole.
WT: 16 lbs. EPA: 1.81

45

ARCHITECTURAL AREA LIGHTING

UNIVERSE COLLECTION®

ROUND ALUMINUM POLES

AAL poles feature American made heat strengthened A356 aluminum castings and 6061 T-6 aluminum extrusions. The hand holes on the four and five inch poles are reinforced for maximum strength to withstand loads from luminaires, arms and banners.
The load values are based on the AASHTO wind load standards. The wind speeds are based on 3 second gust speeds (MPH).

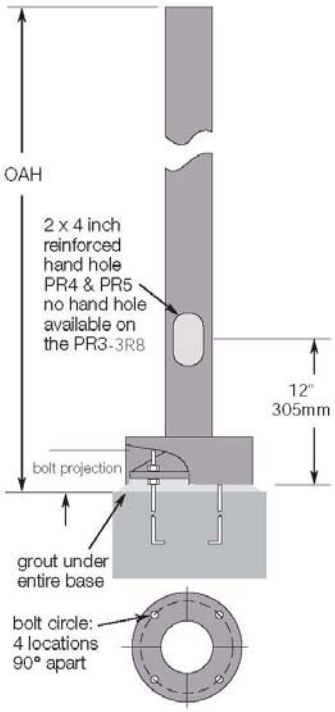

WARNING: Fixture must be grounded in accordance with local codes or the National Electric Code. Failure to do so may result in serious personal injury.

CAUTION: Poles should never be erected without the luminaire installed. Warranty is voided if the pole is erected without the luminaire.

Decorative poles are found on page 48-49

NOTE: Adequate drainage must be provided in concrete foundation or in the grout.

3" Round Aluminum Pole for UCS only

CATALOG NO.				WIND SPEED							
BASE	POLE-WALL	WT	OAH	85	90	100	110	120	130	140	150
PR3	3R8-125	15	8'/2.4m	11.9	10.5	8.3	6.7	5.5	4.5	3.7	3.1
PR3	3R10-125	18	10'/3.1m	8.9	7.8	6.1	4.8	3.8	3.1	2.5	2.0

Bolt circle: 7"/180mm
Base diameter: 9"/230mm Bolts .75" X 24 in (19mm X 610mm)
Bolt projection: 3.50"/89mm

4" Round Aluminum Pole

CATALOG NO.				WIND SPEED							
BASE	POLE-WALL	WT	OAH	85	90	100	110	120	130	140	150
PR4	4R10-125	25	10'/3.1m	19.4	17.1	13.5	10.8	8.9	7.4	6.3	5.5
PR4	4R12-125	29	12'/3.7m	15.3	13.4	10.5	8.3	6.7	5.6	4.7	4.0
PR4	4R14-125	33	14'/4.3m	12.3	10.7	8.2	6.3	5.0	4.1	3.4	2.9
PR4	4R16-125	36	16'/4.9m	10.0	8.6	6.4	4.8	3.6	2.9	2.4	2.0
PR4	4R10-226	39	10'/3.1m	23.8	21.0	16.7	13.5	11.1	9.3	8.0	6.9
PR4	4R12-226	47	12'/3.7m	19.2	16.9	13.3	10.6	8.6	7.2	6.1	5.3
PR4	4R14-226	52	14'/4.3m	15.9	13.9	10.8	8.4	6.8	5.6	4.7	4.0
PR4	4R16-226	58	16'/4.9m	12.4	12.3	9.4	7.3	5.7	4.7	4.0	3.3
PR4	4R18-226	64	18'/5.5m	11.7	10.0	7.5	5.6	4.3	3.5	2.9	2.4
PR4	4R20-226	70	20'/6.1m	9.5	8.1	5.9	4.2	3.1	2.4	1.9	1.6

Bolt circle: 7"/180mm
Base diameter: 9"/230mm Bolts .75" X 24 in (19mm X 610mm)
Bolt projection: 3.75"/95mm

5" Round Aluminum Pole

CATALOG NO.				WIND SPEED							
BASE	POLE-WALL	WT	OAH	85	90	100	110	120	130	140	150
PR5	5R14-188	67	14'/4.3m	32.3	28.5	22.7	18.6	15.5	13.1	11.2	9.6
PR5	5R16-188	74	16'/4.9m	27.3	23.9	19.0	15.5	12.8	10.8	9.2	7.9
PR5	5R18-188	81	18'/5.5m	22.8	19.8	15.6	12.7	10.5	8.8	7.4	6.4
PR5	5R20-188	87	20'/6.1m	18.9	16.4	12.8	10.3	8.5	7.0	5.9	5.0
PR5	5R22-188	93	22'/6.8m	15.8	13.5	10.4	8.3	6.8	5.6	4.7	3.9
PR5	5R24-188	99	24'/7.4m	13.1	11.1	8.4	6.6	5.3	4.3	3.6	3.0
PR5	5R25-188	102	25'/7.7m	11.9	10.0	7.5	5.9	4.7	3.8	3.1	2.5
PR5	5R14-250	82	14'/4.3m	35.7	31.5	25.2	20.6	17.2	14.5	12.4	10.7
PR5	5R16-250	91	16'/4.9m	30.5	26.8	21.3	17.4	14.5	12.2	10.4	9.0
PR5	5R18-250	99	18'/5.5m	25.8	22.5	17.8	14.5	12.0	10.1	8.6	7.3
PR5	5R20-250	108	20'/6.2m	21.8	18.9	14.8	12.0	9.9	8.3	7.0	6.0
PR5	5R22-250	117	22'/6.8m	18.5	15.9	12.4	9.9	8.1	6.7	5.7	4.8
PR5	5R24-250	126	24'/7.4m	15.7	13.4	10.3	8.2	6.6	5.5	4.5	3.8
PR5	5R25-250	131	25'/7.7m	14.5	12.3	9.3	7.4	6.0	4.9	4.0	3.4

Bolt circle: 10"/255mm
Base diameter: 12.5"/320mm
Bolts: .75" X 24" (19mm X 610mm) Bolt projection: 4.75"/120mm

ARCHITECTURAL AREA LIGHTING

DECORATIVE BASE COVERS

UNIVERSE COLLECTION®

Two piece base covers are cast #356 aluminum that fit over standard 4"/100mm or 5"/125mm O.D. poles. Covers are attached with stainless steel hardware. Consult your AAL catalog for complete details on round poles.

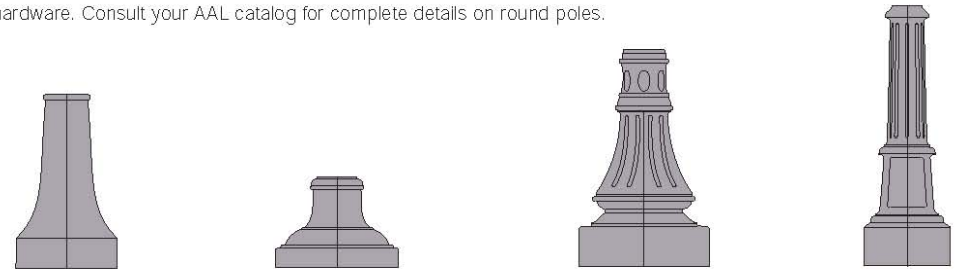

BC5	BC6	BC7	BC8
14" X 24"	17" X 13"	18" X 30"	12" X 36"
355 X 610mm	430 x 330mm	460 x 760mm	305 x 915mm
two piece	two piece	two piece	two piece
for a 4" or 5" pole	for a 4" or 5" pole	for a 4" or 5" pole	for a 4" pole

ACCESSORIES

RBC

Cast aluminum receptacle housing, integrally welded to the pole. Includes a NEC approved clear cover. Does not include a receptacle or internal wiring.

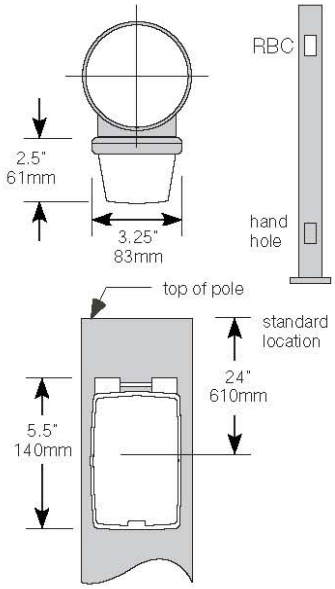

PCA-C

Rotatable photocell housing. The photocell can be aimed away from stray light sources for an accurate setting. The photocell is also shielded from light emissions from the fixture.
The housing slips over a 4"/100mm O.D. pole. a fixture or arm slips over the 4"/100mm O.D. tenon. Includes an internal twist lock receptacle, and an access cover with integral lens. Adds 4.5"/113mm to the overall height of the assembly. Photocell by others.

PCR

Low profile twist lock photocell receptacle with cast pole cap top. Secures to the top of the pole with three stainless steel set screws. Can also be used on the top of the SLA4, SLA16 and SLA20 arms. Photocell by others.

AD5

This adapter is to be used only with standard AAL arms and post top mount fixtures that slip over a 4"/100mm O.D. pole. The AD5 is a cast aluminum adapter that slips into the arm or (PM option on the UCM) and slips over a 5"/125mm O.D. pole.

UNIVERSE COLLECTION®

DECORATIVE POLES

Consult your AAL catalog for complete details on weight and load limits as well as windloading information. Poles are available with smooth round or fluted shafts.

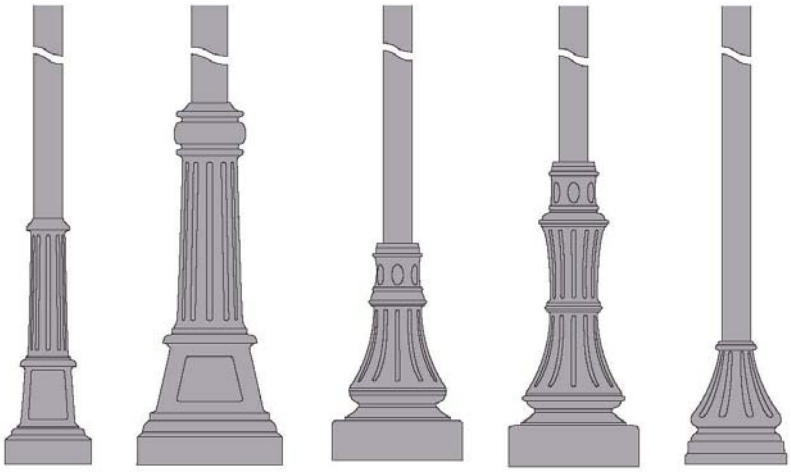

CATALOG NUMBER	DB1	DB2	DB3	DB4	DB5
BASE HEIGHT	34"/865mm	51"/1285mm	30"/760mm	42"/1065mm	17"/43 1mm
BASE DIAMETER	12"/305mm	20"/510mm	18"/460mm	18"/460mm	14"/355mm
POLE DIAMETER	4"/100mm	5"/125mm	4"/100mm 5"/125mm	4"/100mm 5"/125mm	4"/100mm

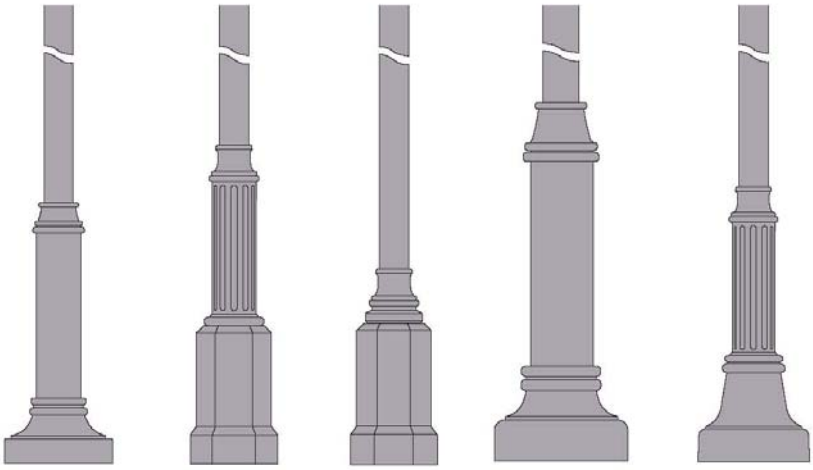

CATALOG NUMBER	DB6	DB8	DB9	DB10	DB12
BASE HEIGHT	36"/915mm	44"/1120mm	27"/685mm	48"/1220mm	39"/1000mm
BASE DIAMETER	15"/380mm	12"/305mm	12"/305mm	18"/460mm	16"/405mm
POLE DIAMETER	4"/100mm	4"/100mm	4"/100mm	5"/125mm	4"/100mm

ARCHITECTURAL AREA LIGHTING 48

MULTI POST POLES

UNIVERSE COLLECTION®

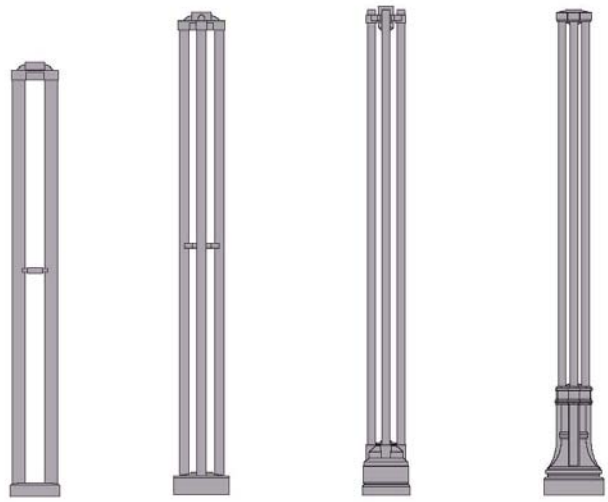

CATALOG NUMBER	2P	3P	C4P	T4P
POLE HEIGHT(S)	8' TO 20'	8' TO 20'	8' TO 20'	8' TO 20'
BASE DIAMETER	12"/305mm	12"/305mm	12.5"/318mm	16"/406mm
POST(S) DIAMETER	(2) 3"/75mm	(3) 2"/50mm	(4) 2"/50mm	(4) 2"/50mm

BANNER ARMS

CATALOG NUMBERS	
BBS4-12	SINGLE ASSEMBLY FOR 4" O.D. POLE, 12" ARM
BBS4-18	SINGLE ASSEMBLY FOR 4" O.D. POLE, 18" ARM
BBS4-24	SINGLE ASSEMBLY FOR 4" O.D. POLE, 24" ARM
BBS4-30	SINGLE ASSEMBLY FOR 4" O.D. POLE, 30" ARM
BBS5-12	SINGLE ASSEMBLY FOR 5" O.D. POLE, 12" ARM
BBS5-18	SINGLE ASSEMBLY FOR 5" O.D. POLE, 18" ARM
BBS5-24	SINGLE ASSEMBLY FOR 5" O.D. POLE, 24" ARM
BBS5-30	SINGLE ASSEMBLY FOR 5" O.D. POLE, 30" ARM
BBD4-12	TWIN ASSEMBLY FOR 4" O.D. POLE, 12" ARMS (2)
BBD4-18	TWIN ASSEMBLY FOR 4" O.D. POLE, 18" ARMS (2)
BBD4-24	TWIN ASSEMBLY FOR 4" O.D. POLE, 24" ARMS (2)
BBD4-30	TWIN ASSEMBLY FOR 4" O.D. POLE, 30" ARMS (2)
BBD5-12	TWIN ASSEMBLY FOR 5" O.D. POLE, 12" ARMS (2)
BBD5-18	TWIN ASSEMBLY FOR 5" O.D. POLE, 18" ARMS (2)
BBD5-24	TWIN ASSEMBLY FOR 5" O.D. POLE, 24" ARMS (2)
BBD5-30	TWIN ASSEMBLY FOR 5" O.D. POLE, 30" ARMS (2)

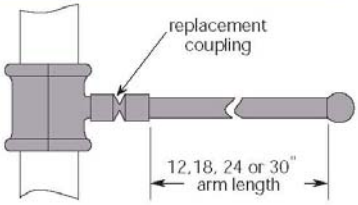

AAL banner arms are clamshell designs for 4"/100mm or 5"/125mm O.D. poles. The banner arms are easily added or removed from the pole. The breakaway coupling is designed to fail before over-stressing the pole. An internal, stainless steel cable keeps the arm attached to the pole assembly.

The failure point for the coupling is affected by the banner type, pole height and vertical location of the banner on the pole. The loading is also affected by securing the banner at the top only, or the top and bottom. Contact the factory for the maximum banner size recommended for your application.

49 ARCHITECTURAL AREA LIGHTING

UNIVERSE COLLECTION®

PHOTOMETRY

LAMP TYPE	LUMENS	CONVERSION FACTOR A	B	C
50 MH, E-17	3200	1.00 .38	.20	
70 MH, E-17	5200	1.63 .61	.33	
100 MH, E-17	9300		1.00	.53
150 MH, E-17	12500			.78
175 MH, E-17	14000			.75
50 HPS, E-17	3600	1.13 .42	.23	
70 HPS, E-17	6400	2.00 .75	.40	
100 HPS, E-17	9500		1.12	.59
150 HPS, E-17	16000			1.00

Note: If using a lamp with different lumen output than listed above, consult AAL for conversion factor.

The values below are in initial footcandles. Discount values to account for light losses due to voltage, temperature and atmospheric variations which affect light output.

To substitute another lamp in the isocandle charts below, multiply the chart values by the lamp conversion factor on the left. Mounting height is to the lamp center.

All testing performed by a certified independent laboratory. Photometry is available in IES formatted files at www.aal.net.

UCS ANG 50MH USE CONVERSION COLUMN A

10'	12'	14'	16'
2.00	1.38	1.02	.78
1.00	.69	.51	.39
.50	.35	.26	.20
.20	.14	.10	.08

10' MOUNTING HEIGHT
one grid square equals one mounting height

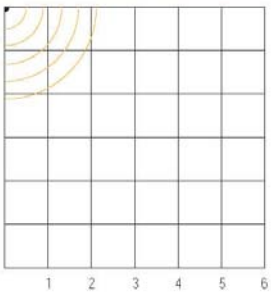

UCM ANG OAL 100MH USE CONVERSION COLUMN B

12'	14'	16'	18'
2.72	2.00	1.54	1.20
1.36	1.00	.77	.60
.68	.50	.39	.30
.27	.20	.15	.12

14' MOUNTING HEIGHT
one grid square equals one mounting height

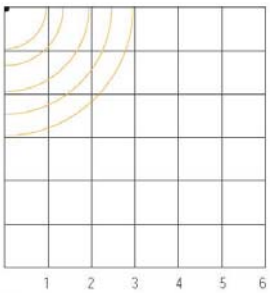

UCM H2 150HPS ED`-17 USE CONVERSION COLUMN C

14' MOUNTING HEIGHT
one grid square equals one mounting height

12'	14'	16'	18'
6.80	5.00	3.85	3.00
2.72	2.00	1.54	1.20
1.36	1.00	.77	.60
.68	.50	.39	.30
.27	.20	.15	.12

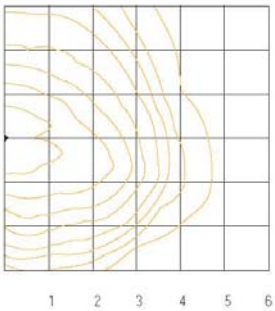

UCM H3 150HPS USE CONVERSION COLUMN C

14' MOUNTING HEIGHT
one grid square equals one mounting height

12'	14'	16'	18'
6.80	5.00	3.85	3.00
2.72	2.00	1.54	1.20
1.36	1.00	.77	.60
.68	.50	.39	.30
.27	.20	.15	.12

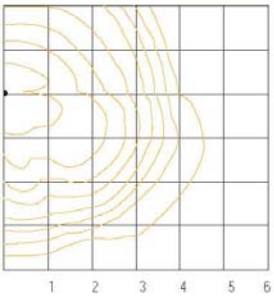

UCM H4 150HPS USE CONVERSION COLUMN C

14' MOUNTING HEIGHT
one grid square equals one mounting height

12'	14'	16'	18'
6.80	5.00	3.85	3.00
2.72	2.00	1.54	1.20
1.36	1.00	.77	.60
.68	.50	.39	.30
.27	.20	.15	.12

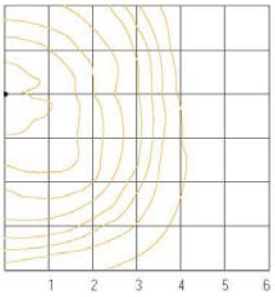

UCM H5 150HPS USE CONVERSION COLUMN C

14' MOUNTING HEIGHT
one grid square equals one mounting height

12'	14'	16'	18'
6.80	5.00	3.85	3.00
2.72	2.00	1.54	1.20
1.36	1.00	.77	.60
.68	.50	.39	.30
.27	.20	.15	.12

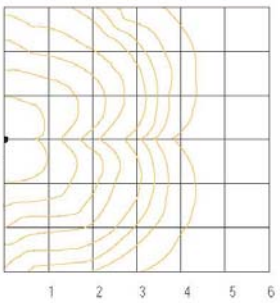

ARCHITECTURAL AREA LIGHTING 50

PHOTOMETRY

UNIVERSE COLLECTION®

UNIVERSE LARGE

	LUMENS	A
250 PSMH, POMB	21,850	0.78
400 PSMH, POMB	40,000-PH	1.43
150 HPS	16,000-GE	0.57
250 HPS	28,000-GE	1
400 HPS	50,000-P	1.79

The values below are in initial footcandles. Discount values to account for light losses due to voltage, temperature and atmospheric variations which affect light output.

To substitute another lamp in the isocandle charts below, multiply the chart values by the lamp conversion factor on the left. Mounting height is to the lamp center.

All testing performed by a certified independent laboratory. Photometry is available in IES formatted files at www.aal.net.

UCL-H3-250PSMH@16

16' MOUNTING HEIGHT
one grid square equals one mounting height

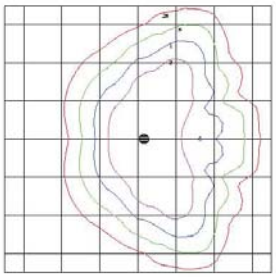

UCL-H3-320PSMH@25

16' MOUNTING HEIGHT
one grid square equals one mounting height

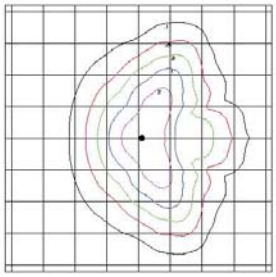

UCL-H5-250PSMH@16

16' MOUNTING HEIGHT
one grid square equals one mounting height

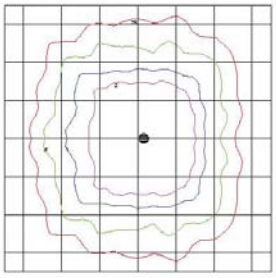

UCL-H5-350PSMH@25

16' MOUNTING HEIGHT
one grid square equals one mounting height

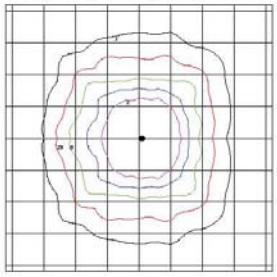

UCB 70MH

42" MOUNTING HEIGHT

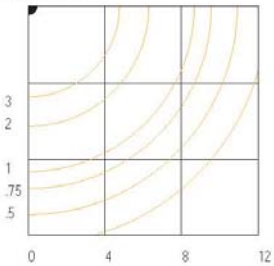

UCB-VSL 70MH

42" MOUNTING HEIGHT

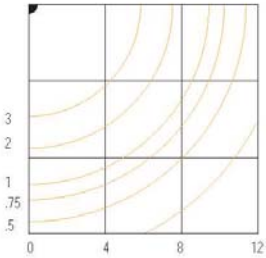

51

ARCHITECTURAL AREA LIGHTING

KIM LIGHTING

PGL4
Parking Garage Luminaires
revision 1/5/09 • pgl4.pdf

Type:
Job:

Page: 4 of 4

Optional Features

Fusing (internal only): Cat. No. **(see chart at right)** ☐ **No Option**	High temperature fuse holders factory installed inside the fixture housing. Fuse is included. Line Volts: 120V 208V 240V 277V 347V 480V Cat. No.: ☐ **SF** ☐ **DF** ☐ **DF** ☐ **SF** ☐ **SF** ☐ **DF**
Lamp Included Cat. No. ☐ **Lamp Included** ☐ **No Option**	To order fixtures with lamp included and installed, add "**lamp included**" suffix to catalog number. Will also include **QS** option lamp (when specified).
Balanced Pendant Junction Box and Bird Shroud Cat. No. ☐ **PB2** ☐ **No Option**	Cast aluminum, finished to match fixture body. Offset ¾″ NPT pendant entry to balance fixture in free-swinging installation. For fixture mounting, Kim Speed Mount attaches directly to Balanced Pendant Junction Box (PB2). 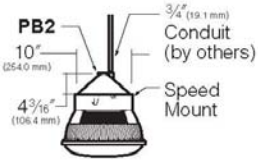

© 2009 KIM LIGHTING INC. • P.O. BOX 60080, CITY OF INDUSTRY, CA 91716-0080 • TEL: 626/968-5666 • FAX: 626/369-2695 5606009360

Reset Form

KIM LIGHTING

PGL4

Parking Garage Luminaires

revision 1/5/09 • pgl4.pdf

Type:
Job:
Catalog number:

PGL4	/	/
Fixture	Electrical Module See page 2	Options See pages 3-4

Approvals:

Date:
Page: 1 of 4

Specifications

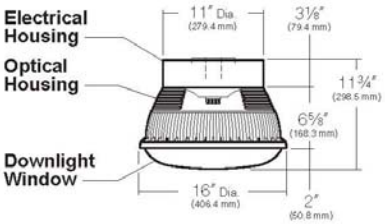

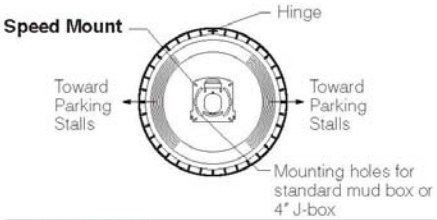

Pendant Installations

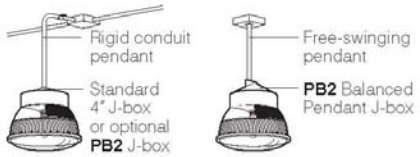

- For Free conduit pedant mount, use a standard 4" junction box with a centered pendant entry.
- For Free-swinging pendant mount, use the optional **PB2** Balanced Pendant Juction Box (page **3**).
- For all pendant installations where bird shroud protection is desired, use the optional **PB2** Balanced Pendant Junction Box (page **3**).

Speed Mount: Formed steel, electro-zinc plated for mounting to standard 4" junction box or mud box. Hooks are designed to hang fixture, freeing both hands for field wire connections. Allows tool-free fixture mounting to junction box, with integral anti-theft locking device.

Ballast Housing: Die-cast, low copper (<0.6% Cu) aluminum alloy for direct mounting to the Kim Speed Mount. Wire entry is sealed with a silicone grommet.

Optical Housing: One-piece injection molded UV stabilized polycarbonate (minimum wall thickness .125") with clear uplight window. Reflector has vertical facets to prevent reflected light from passing through the lamp envelope. Uplight window contains two prismed sections to spread additional light downward in the direction of parking stalls. Optical Housing is secured to Electrical Housing with full silicone gasketing around the perimeter.

Uplight Reflector and Socket: One-piece hydroformed aluminum with Alzak® surface facing prisms and diffuse white surface facing uplight window areas. Socket is 4KV pulse rated medium base. Reflector is removed by loosening three screws allowing access to the electrical components.

Downlight Window: One-piece clear injection molded UV stabilized high temperature acrylic (polycarbonate optional). Attached to optical housing with a "no-tool" quick release spring hinge and three captive phillips-head "shoulder" type screws to prevent overtightening (tamper-resistant hex socket screws optional). Perimeter is fully gasketed with silicone. Convex shape yields maximum light transmission.

HID Electrical Components: High power factor ballasts for -20°F. starting, rigidly mounted inside electrical housing and prewired with leads extended out top of housing.

Induction Fluorescent Lamp Electrical Components: Complete HF generator and induction lamp system is furnished. Induction lamp system is high power factor, rated for -4° starting.

Optical Configuration: In the direction of the driving lanes, luminaire downlight is of the "cutoff" classification with uplight provided for illuminating ceiling and beams. In the direction of parking stalls, luminaire is a "semi-direct" type with partial uplight refracted downward for additional fill-light in the parking stalls. In all directions, lamp is shielded from normal viewing angles by the reflector section of the luminaire.

Finish: PGL4: Platinum Silver color on ballast housing only. Super TGIC thermoset polyester powder coat paint over titanated zirconium conversion coating. Clear optical housing.

CAUTION: Fixtures must be grounded in accordance with national, state and/or local electrical codes. Failure to do so may result in serious personal injury.

Listings and Ratings		
UL cUL 1598[1]	IP66 Rated	40C Ambient

[1]Suitable for wet locations

KIM LIGHTING RESERVES THE RIGHT TO CHANGE SPECIFICATIONS WITHOUT NOTICE.

HUBBELL LIGHTING, INC.

© 2009 KIM LIGHTING INC. • P.O. BOX 60080, CITY OF INDUSTRY, CA 91716-0080 • TEL: 626/968-5666 • FAX: 626/369-2695 5606009360

KIM LIGHTING

PGL4

Parking Garage Luminaires

revision 1/5/09 • pgl4.pdf

Type:

Job:

Page: 2 of 4

Standard Features

Fixture

Cat. No. PGL4

Contemporary garage luminaire. Die-cast, low copper (<0.6% Cu) aluminum alloy ballast housing with Platinum Silver Super TGIC powder coat paint over titanated zirconium conversion coating, one-piece clear optical housing. Downlight optical reflector visible through optical housing material.

Electrical Module

PMH = Pulse Start Metal Halide

HPS = High Pressure Sodium

IF = Induction Fluorescent

[1]**NOTE:** Refer to ANSI Type for proper lamp.

Lamp Watts	Lamp Type	Line Volts
150	**PMH**	**277**

CAUTION: All manufacturers of metal halide lamps recommend turning them off for 15 minutes once per week when under continuous operation. This will reduce the risk of arc tube rupture at end of life. Also, color temperature may differ between manufacturers of metal halide lamps. See lamp manufacturer's specification sheets.

All fixtures are available pre-lamped by Kim. Consult representative for pricing.

Cat. Nos. for Electrical Modules available:

	Pulse Start Metal Halide	
	☐ **100PMH120**	☐ **150PMH120**
	☐ **100PMH208**	☐ **150PMH208**
	☐ **100PMH240**	☐ **150PMH240**
	☐ **100PMH277**	☐ **150PMH277**
	☐ **100PMH347**	☐ **150PMH347**
	☐ **100PMH480**[2]	☐ **150PMH480**[2]
Lamp	ED-17, Clear	ED-17, Clear
Socket	Medium Base	Medium Base
ANSI Ballast Type	M-90	M-102

	High Pressure Sodium		Induction Fluorescent
	☐ **100HPS120**	☐ **150HPS120**	☐ **85IF120**
	☐ **100HPS208**	☐ **150HPS208**	☐ **85IF208**
	☐ **100HPS240**	☐ **150HPS240**	☐ **85IF240**
	☐ **100HPS277**	☐ **150HPS277**	☐ **85IF277**
	☐ **100HPS347**	☐ **150HPS347**	
	☐ **100HPS480**[2]	☐ **150HPS480**[2]	
Lamp	ED-17, Clear	ED-17, Clear	85 Watt
Socket	Medium Base	Medium Base	
ANSI Ballast Type	S-54	S-55	

[2]480 volt with medium base sockets may require approval of local building code authority.

© 2009 KIM LIGHTING INC. • P.O. BOX 60080, CITY OF INDUSTRY, CA 91716-0080 • TEL: 626/968-5666 • FAX: 626/369-2695 5606009360

KIM LIGHTING

PGL4
Parking Garage Luminaires
revision 1/5/09 • pgl4.pdf

Type:
Job:

Page: 3 of 4

Optional Features

Narrow Downlight Optics Cat. No. ☐ **DL-N** ☐ **No Option**	Two-piece hydroformed aluminum reflector with Alzak finish. Reflector fills optical housing and provides minimal uplight distribution. Symmetric downlight distribution is narrower than standard symmetric pattern, with increased intensity.	
Wide Downlight Optics Cat. No. ☐ **DL-W** ☐ **No Option**	Two-piece hydroformed aluminum reflector with Alzak finish. Reflector fills optical housing and provides minimal uplight distribution. Symmetric downlight distribution is similar to standard symmetric pattern, with increased intensity.	
Polycarbonate Downlight Lens Cat. No. ☐ **LS** ☐ **No Option**	One-piece clear injection molded UV stabilized polycarbonate Downlight Lens replaces the standard acrylic. **CAUTION:** Use only when fixture vandalism is anticipated within the parking garage. Service life is reduced by UV discoloration from Pulse Start Metal Halide lamps. High Pressure Sodium lamps are recommended to promote full service life.	Polycarbonate Downlight Lens
Painted Optical Housing Cat. No. ☐ **PSH** ☐ **No Option**	Conceals the down-light optical housing reflector. The color is matched to the electrical housing.	Painted Optical Housing
Quartz Standby Cat. No. ☐ **QS** ☐ **No Option**	Integral current sensing relay energizes a T-4 mini-can socket during lamp warm-up and after power interruption. Socket de-energizes prior to the HID lamp reaching full brightness. T-4 mini-can halogen lamp by others; 100 watt maximum. **NOTE: Input amps will increase by .80 with this option.** Not available on 85IF.	Quartz Standby
Tamper-Resistant Lens Screws Cat. No. ☐ **TS** ☐ **No Option**	Captive hex socket (allen) shoulder screws provided for downlight window instead of standard phillips-head screws.	

© 2009 KIM LIGHTING INC. • P.O. BOX 60080, CITY OF INDUSTRY, CA 91716-0080 • TEL: 626/968-5666 • FAX: 626/369-2695 5606009360

KIM LIGHTING

PGL2 Omni-System®

Single Row Parking Garage Luminaire

revision 1/5/09 • pgl2.pdf

Type:

Job:

Page: 4 of 4

Fixture Accessory Features

Ordered Separately from Fixture

Direct Side Entry Conduit Taps

Cat. No. ☐ **SCT2** (for ½")
☐ **SCT3** (for ¾")
☐ **No Option**

Consult Factory. Four locations are provided on the electrical housing 90° apart for ½" or ¾" NPT. Fixture is UL and cUL certified for 90°C through-wiring.

NOTE: This method is more difficult to install, but offers the advantage of reduced depth where floor-to-ceiling distance is minimal. Fixtures must be ordered with ½" or ¾" NPT conduit taps. The lens cage and reflector must be removed from the fixture to allow mounting to the ceiling and wiring.

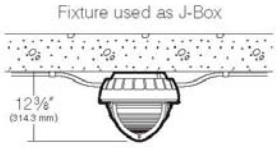

Louver Module

Cat. No. ☐ **LM**
☐ **No Option**

Die-cast, low copper (<0.6% Cu) aluminum alloy for field attachment into one quadrant of the lens cage. White powder coat finish. Louver Modules will be shipped in packs of 12 with one carton adjusted to complete exact quantity ordered.

Balanced Pendant J-Box

Cat. No.: ☐ **PB2**
☐ **No Option**

Die-cast, low copper (<0.6% Cu) aluminum alloy junction box with offset ¾" N.P.T. pendant entry to balance fixture when a free-swinging pendant is used. Standard speed mount adapts directly to the PB2 for fixture mounting. Super TGIC powder coat finish to match.

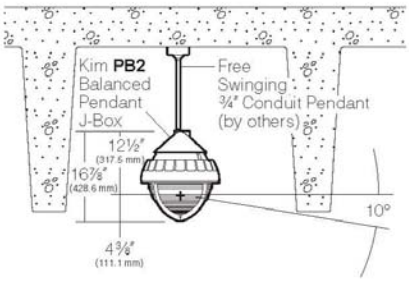

Wall Mount

Cat. No.: ☐ **WB**
☐ **No Option**

Cast aluminum construction. Mounts to wall with two ⅜" lag screws fastened to ⅜" concrete anchors (by others). Super TGIC powder coat finish to match fixture.

© 2009 KIM LIGHTING INC. • P.O. BOX 60080, CITY OF INDUSTRY, CA 91716-0080 • TEL: 626/968-5666 • FAX: 626/369-2695 5606109360

Reset Form

KIM LIGHTING

PGL2 Omni-System®

Single Row Parking Garage Luminaire

revision 1/5/09 • pgl2.pdf

Type:
Job:
Fixture Catalog number:

PGL2	/	/
Fixture	Electrical Module See page 2	Optional Features See page 3

Fixture Accessory numbers:

Ordered Separately from Fixture
See page 4

Approvals:

Date:
Page: 1 of 4

Specifications

Max. Fixture Weight - 26.5 lb.
Louver Weight - 1 lb. each

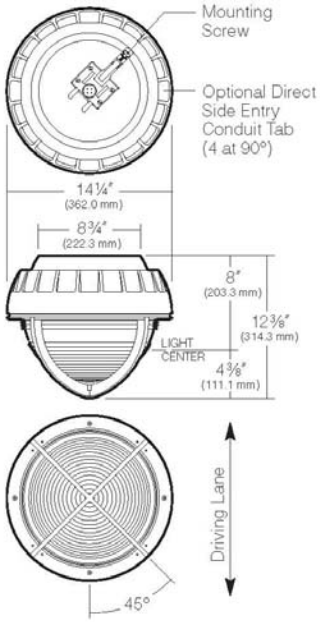

Icon shows plan view orientation of lens cage.

Location of optional Louver Modules indicated as solid quadrants in icon.

Speed Mount: Formed steel, electro zinc plated for mounting to standard 4" junction boxes or mud boxes. Integral hooks are provided for mounting and securing the fixture. Speed mount is labeled with fixture icon and driving direction. (See Listings and Ratings.)

Electrical Housing: Die-cast, low copper (<0.6% Cu) aluminum alloy with integral cooling ribs. A stainless steel plate and hook are provided on the fixture top for suspending the fixture from the speed mount during field wire connections, and for final securing to the speed mount. Fixture wires are sealed at the exit point by a silicone grommet in the fixture top. A single stainless steel phillips head screw operates a mechanism that pulls and secures the fixture to the speed mount. Four locations are provided for optional direct side conduit entry (consult factory). Top is labeled with the fixture icon and driving direction to match the speed mount label.

Lens Cage and Refractor: Die-cast, low copper (<0.6% Cu) aluminum alloy lens cage retains a tempered borosilicate glass refractor. A one-piece molded silicone gasket surrounds the refractor flange and seals the lens cage to the electrical housing. Stainless steel clips secure the refractor to the lens cage. Lens cage ribs are ⅜" thick and divide the refractor into four quadrants for insertion of optional louver module. Lens cage hinges open by a removable stainless steel wire hinge and safety catch. Lens cage closure screws are captive stainless steel phillips head with optional tamper resistant socket head available. Lens cage is pre-drilled in each quadrant for optional louver module. **NOTE:** Lens cage may be removed with louver modules in place.

Reflector and Socket: Hydroformed aluminum reflector with Alzak® finish. Integral socket is porcelain medium base rated 4KV. Reflector is removable by four screws for ballast access.

Electrical Components: High power factor ballasts are rigidly mounted inside the electrical housing, factory pre-wired with leads extending through a silicone grommet out the top of the housing. Starting temperatures are -40°F for HPS lamp modes and -20°F for PMH lamp modes.

Optional Louver Module: Die-cast, low copper (<0.6% Cu) aluminum alloy for field attachment into one quadrant of the lens cage. Mounting screws are captive stainless steel phillips head (2).

Finish: White Super TGIC thermoset polyester powder coat paint applied over a titanated zirconium conversion coating on electrical housing, lens cage and optional louver module. 2500 hours salt spray test endurance rating. Custom colors are avaiable.

CAUTION: Fixtures must be grounded in accordance with national, state and/or local electrical codes. Failure to do so may result in serious personal injury.

Listings and Ratings		
UL cUL 1598	IP66 Rated	40C Ambient

KIM LIGHTING RESERVES THE RIGHT TO CHANGE SPECIFICATIONS WITHOUT NOTICE.

HUBBELL
HUBBELL LIGHTING, INC.

© 2009 KIM LIGHTING INC. • P.O. BOX 60080, CITY OF INDUSTRY, CA 91716-0080 • TEL: 626/968-5666 • FAX: 626/369-2695 5606109360

KIM LIGHTING

PGL2 Omni-System®

Single Row Parking Garage Luminaire

revision 1/5/09 • pgl2.pdf

Type:

Job:

Page: 2 of 4

Standard Features

Fixture

Cat. No.: **PGL2**
Single Row System
Lens cage is oriented 45° to the driving lane.

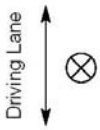

Electrical Module

PMH = Pulse Start Metal Halide

HPS = High Pressure Sodium

IF = Induction Fluorescent

Lamp Watts	Lamp Type	Line Volts
150	**PMH**	**277**

CAUTION: All manufacturers of metal halide lamps recommend turning them off for 15 minutes, once per week, when under continuous operation. This will reduce the risk of arc tube rupture at end of life. Also, color temperature may differ between manufacturers of metal halide lamps. See lamp manufacturers' specification sheets.

All fixtures are available pre-lamped by Kim. Consult representative for pricing.

NOTE: For lamp/ballast information outside of the U.S. and Canada, please consult your local Kim representative.

Cat. Nos. for Electrical Modules available:

	☐ **100PMH120**	☐ **150PMH120**
	☐ **100PMH208**	☐ **150PMH208**
	☐ **100PMH240**	☐ **150PMH240**
	☐ **100PMH277**	☐ **150PMH277**
	☐ **100PMH347**	☐ **150PMH347**
	☐ **100PMH480**[1]	☐ **150PMH480**[1]
Lamp	ED-17, Clear	ED-17, Clear
Socket	Medium Base	Medium Base
ANSI Ballast Type	M-90	M-102

	☐ **100HPS120**	☐ **150HPS120**	☐ **85IF120**
	☐ **100HPS208**	☐ **150HPS208**	☐ **85IF208**
	☐ **100HPS240**	☐ **150HPS240**	☐ **85IF240**
	☐ **100HPS277**	☐ **150HPS277**	☐ **85IF277**
	☐ **100HPS347**	☐ **150HPS347**	
	☐ **100HPS480**[1]	☐ **150HPS480**[1]	
Lamp	ED-17, Clear	ED-17, Clear	Induction Fluor.
Socket	Medium Base	Medium Base	
ANSI Ballast Type	S-54	S-55	

[1]480 volt with medium base sockets may require approval of local building code authority.

© 2009 KIM LIGHTING INC. • P.O. BOX 60080, CITY OF INDUSTRY, CA 91716-0080 • TEL: 626/968-5666 • FAX: 626/369-2695 5606109360

KIM LIGHTING

PGL2 Omni-System®

Single Row Parking Garage Luminaire

revision 1/5/09 • pgl2.pdf

Type:

Job:

Page: 3 of 4

Optional Features

Quartz Standby Cat. No. ☐ **QS** ☐ **No Option**	Integral electronic device energizes a T-4 mini-can socket during lamp warm-up and after power interruption. Socket de-energizes prior to the HID lamp reaching full brightness. 100W T-4 mini-can lamp by others.
Tamper-Resistant Lens Cage Screws Cat. No. ☐ **TS** ☐ **No Option**	Four captive stainless steel socket head screws provided in lens cage in place of standard phillips head screws.
Fusing (internal only): Cat. No. **(see chart at right)** ☐ **No Option**	High temperature fuse holders factory installed inside the electrical housing. Fuse is included. Line Volts: 120V 208V 240V 277V 347V 480V Cat. No.: ☐ **SF** ☐ **DF** ☐ **DF** ☐ **SF** ☐ **SF** ☐ **DF**

© 2009 KIM LIGHTING INC. • P.O. BOX 60080, CITY OF INDUSTRY, CA 91716-0080 • TEL: 626/968-5666 • FAX: 626/369-2695 5606109360

The SL CS14W features a cast, wall mounted arm assembly.

The threaded fitter offers secure, tool free access to the lamp. No springs to weaken from exposure to heat. A silicone gasket keeps the lamp compartment free of insects and dirt.

The horizontal band can be ordered in a different color than the body. Custom band designs can be specified in unlimited configurations. STSB option shown.

SPECIFICATIONS

HOUSING

The fixture fitter shall be one piece cast aluminum. The fitter shall house the electrical assembly (except 250 watt). The housing shall have a tool less access to the lamp by means of a threaded fitter on the lens. The opal lens shall be one piece formed acrylic, sealed to a cast aluminum threaded fitter for attaching to the fixture, with no hardware. The fixture is relamped by unscrewing the lens one full turn. The lamp chamber shall be sealed from the elements with a silicone compression gasket.

REFRACTOR LENS

The refractor shall be precision molded borosilicate glass. The refractor shall be gasketed, top and bottom, to allow for heat expansion.

REFLECTOR MODULE

The optical assembly shall consist of a polished specular upper reflector and a satin finished lower reflector to control glare. The reflector module shall be mounted to the fitter assembly and remain stationary when the globe is removed.

ELECTRICAL

Electrical components shall be mounted and wired to a mounting plate within the fixture. The ballast compartment shall be sealed with an aluminum cover. All electrical components and materials shall be U.L. recognized. Ballasts are high power factor rated for -30° starting. Medium base porcelain sockets are 4KV rated. Mogul base porcelain sockets are 4KV rated. Fluorescent ballasts are electronic, rated for -5°F starting for use with 4 pin double twin tube T-4 lamps.

MOUNTING

Fixture slips over a 4 inch O.D. pole for post top mounting.

FINISH

Fixture finish consists of a five stage pretreatment regimen with a polymer primer sealer, oven dry off and top coated with a thermoset super TGIC polyester powder coat finish. The finish shall meet the AAMA 605.2 performance specification which includes passing a 3000 hour salt spray test for corrosion resistance.

CERTIFICATION

The fixture is listed with UL for outdoor, wet location use, UL1598. IP Rating: 56.

WARRANTY

Fixture is warranted for three years. Ballast components carry the ballast manufacturer's limited warranty.

PHOTOMETRY

Complete photometric data is available in IES formatted files on AAL's website: www.aal.net.

ARCHITECTURAL AREA LIGHTING

14249 Artesia Boulevard, La Mirada, CA 90638
tel (714) 994-2700, fax (714) 994-0522
www.aal.net
Copyright © 2005, AAL

Hubbell Lighting, Inc.

CORONADO

SL CS

2-SL CS18W-SLA22U-DB6-4R16 2-BBS4-24

4-SL CS18W-SLA22U-DB6-4R16 2-BBS4-24

ARCHITECTURAL AREA LIGHTING 1

ORDERING EXAMPLES

FIXTURE	LAMP/BALLAST	ARM	BASE-POLE	COLOR	OPTIONS
SL CS18W	100MH	WMA22	•	BLK	•
SL CS20CGR3	150HPS	•	DB6-4R16-125	WHT	LDL

14" FIXTURE	DESCRIPTION	LBS	EPA	IP
SL CS14W	opal lens, includes welded arm	24	1.44	56
SL CS14CGR3	clear acrylic lens, type 3 glass refractor, includes welded arm	25	1.44	56
SL CS14CL	clear acrylic lens, low brightness radial louvers, includes welded arm	25	1.44	56
SL CS14LDL	clear acrylic lightly diffused lens, includes welded arm	24	1.44	56

NOTE: Integral ballast for flourescent only, HID ballast are remote. Maximum wattage shall be 100 watts.

18" FIXTURE	DESCRIPTION	LBS	EPA	IP
SL CS18W	opal lens	32	2.15	56
SL CS18CGR3	clear acrylic lens, type 3 glass refractor	35	2.15	56
SL CS18CGR5	clear acrylic lens, type 5 glass refractor	35	2.15	56
SL CS18LDL	clear acrylic lightly diffused lens	32	2.15	56
SL CS18LDLT3	clear acrylic lightly diffused lens, type 3 upper reflector	33	2.15	56
SL CS18LDLT5	clear acrylic lightly diffused lens, type 5 upper reflector	33	2.15	56

NOTE: Maximum wattage shall be 175 watts.

20" FIXTURE	DESCRIPTION	LBS	EPA	IP
SL CS20W*	opal lens	32	2.15	56
SL CS20CGR3*	clear acrylic lens, type 3 glass refractor	35	2.15	56
SL CS20CGR5*	clear acrylic lens, type 5 glass refractor	35	2.15	56
SL CS20LDL*	clear acrylic lightly diffused lens	32	2.15	56
SL CS20LDLT3*	clear acrylic lightly diffused lens, type 3 upper reflector	33	2.15	56
SL CS20LDLT5*	clear acrylic lightly diffused lens, type 5 upper reflector	33	2.15	56

**Remote ballast required on 250 watt fixtures.*

LAMP/BALLAST

CF	Compact fluorescent, electronic ballast 120 thru 277 volt. Use 4-pin, 26, 32 or 42 watt lamp. Only for SL CS14W. **(ballast in arm)**
50MH	50 watt metal halide, 120/277 volt ballast. Use medium base, clear ED-17 lamps.
70MH	70 watt metal halide, 120/208/240/277 volt ballast. Use medium base, clear ED-17 lamps.
100MH	100 watt metal halide 120/208/240/277 volt ballast. Use medium base, clear ED-17 lamps.
150MH	150 watt metal halide 120/208/240/277 volt ballast. Use medium base, clear ED-17 lamps.
175MH	175 watt metal halide, 120/208/240/277 volt ballast. Use medium base, clear ED-17 lamps.
250MH	250 watt metal halide, 120/208/240/277 volt multitap ballast. Use mogul base, clear ED-28 lamps. **(remote ballast)**
50HPS	50 watt high pressure sodium, 120/277 volt ballast. Use medium base, clear ED-17 lamps.
70HPS	70 watt high pressure sodium, 120/208/240/277 volt ballast. Use medium base, clear ED-17 lamps.
100HPS	100 watt high pressure sodium, 120/208/240/277 volt ballast. Use medium base, clear ED-17 lamps.
150HPS	150 watt high pressure sodium, 120/208/240/277 volt ballast. Use medium base, clear ED-17 lamps.
250HPS	250 watt high pressure sodium, 120/208/240/277 volt multitap ballast. Use mogul base, clear ED-28 lamps. **(remote ballast)**
NOTE:	*Lamps not included. All fixtures prewired for 277 volts except SL CS14.*

COLORS

--->	Standard AAL Colors.

OPTIONS

STSB	Horizontal band of satin brushed stainless steel.
AD5	Adaptor for a 5" o.d. pole.
LDL	Lightly diffused lens to conceal fixture interior.

2 ARCHITECTURAL AREA LIGHTING

KW Industries

Page 4 of 4

BC	Base Cover
NC	Nut Covers
CPL	Threaded Coupling*
NPL	Threaded Nipple*
WPR2	Weatherproof Duplex Receptacle**
WPRP	Festoon Opening**
CS	Climbing Steps
SC	Safety Cable

Poles ordered with climbing steps will include provisions for safety cable mounting.
Poles ordered with safety cable will be provided with one safety device and belt per order unless otherwise requested.

Optional Handholes

58HH	5 " x 8 " Handhole*
410HH	4 " x 10 " Handhole*

Extra Handholes

XHH	Extra Handhole*

Embedment Pole Options

E	Embedded Pole
GS	Ground Sleeve
CTE	Coal Tar Epoxy

Additional Simplex

1S	1 @ 0° *
2S	2 @ 180° *
3S	3 @ 90° *
4S	4 @ 90° *

For Embedment Poles:

Recommended Mounting Height	Recommended Embedment Depth
Less than 20'	4'
20' - 33'	6'
34' - 39'	7'
40' - 60'	10'

Greater embedment depths are available upon request.
Embedment poles greater than 60' are not available.

* Please advise size, location, and orientation. (Handholes are restricted by size of pole shaft diameter)
** Located 24" above baseplate and same side as handhole. (No electrical included)

PACKAGING

Immediately after coating, the lighting standard including the baseplate shall be wrapped in heavy corrugation specially desig and sized to achieve maximum protection in transit.

KW Industries, Inc. coating process system and stringent quality control procedures provide our customer the finest quality lighting standards in the industry.

http://www.kwindustries.com/LightingStandards.asp?Serie=RTSP&Print=Yes 01/14/2009

TYPE A
CAT# PS1-G-CL-277-C

Lumecon Luminance + Economy

Relume Parking Garage Lights

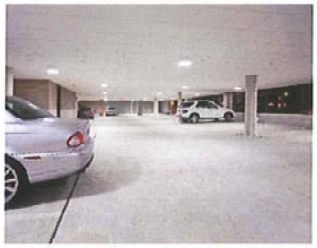

SPECIFICATIONS Relume High Output LED Garage Parking Fixtures are full cut-off rated LED luminaires. The units are designed for maximum thermal dissipation of heat away from the LEDs. Limiting the temperature rise of the LED at the mounting position to under 45°F (25°C) during continuous operating conditions, insures projected life and luminous output.

LED LIGHT ENGINE CONSTRUCTION The Relume High Output LED Light engine panel consists of circuit board conductors comprised of an insulated aluminum substrate with a minimum thickness of 0.080 inch. Circuit conductors and LED attachment adhesive is no less than 90% pure silver to insure optimal electrical and thermal conductivity. The complete face of the LED light engine panel is uniformly coated with a 2 part UV stabilized urethane resin, no thinner than 0.002 inch (dry) to adequately protect the light engine panel from moisture and corrosion, meeting GM4901 paint specifications.

LED LIGHT COLOR / QUALITY The High Output LEDs range from 5,500K to 7,000K on the Kelvin temperature scale and are rated for a minimum of 70,000 hours of continuous operation at ambient temperatures from -40°F (-40°C) to 122°F (+50°C).

HOUSING: Aircraft Quality 6061 aluminum is extruded to form the picture box frame and thermal dissipation sink all in one.

LENSES Each LED module is protected by a high impact, UV stabilized, and non yellowing polycarbonate lens. As an added bonus LEDs emit no UV rays thus eliminating yellowing of the lens from the inside, thus doubling the life. Prismatic lens available at an additional cost.

ELECTRICAL Each power supply (driver) is UL class 1 compliant, IP66 rated, operating from a 60 HZ +/- 3 HZ AC line over a voltage ranging from 95 volts to 280 volts. Each driver is an efficient switcher with a power factor of greater than 0.91 with an input current of less than 20% Total Harmonic Distortion (THD). Fluctuations of the line voltage have no visible effect on the luminous output. Each driver includes voltage surge protection to withstand high repetition noise transients while meeting emission limits as set forth by the FCC Title 47, Subpart B, Section 15. 347-480 volt 50/60 HZ driver available at an additional cost.

WIRING All wiring conforms to requirements set forth in Section 13.02 of the ITE Publication: Equipment and Material Standards, Chapter 2 (Vehicle Traffic Control Signal Heads).

ENVIRONMENTAL All Relume Light engines fully comply with the Restriction of Hazardous Substances Directives (RoHS) adopted in February 2003 by the European Union.

QUALITY ASSURANCE All Relume Light engines have been independently tested and passed FDOT environmental requirements A615-2(Operating Voltage and Frequency), A615-3(Power Interruption), A615-4 (Temperature and Humidity), A615-5 (Vibration), A615-6 (Shock), A615-7 (Transients: Power Service, Input-Output Terminals and Non-Destruct Transient Immunity). Relume has also been UL wet or damp rated, and FCC tested and approved. In production, each Light engine panel is burned-in for an 8 hour period and certified for compliance by Relume Internal QA process. A quality control tracking label, including date of manufacture, is mounted on the inside of the LED Light engine panel.

PATENT NUMBERS 6,582,100 B1: 6,428,189,B1: 6,045,240: 5,857,767: 5,785,418: 5,783,909: 5,762,555

Lumecon Luminance + Economy

For more information, visit www.lumecon.com or call toll free 877 - 564 - 3133 **REV. 8/14/09**

Relume Parking Garage Lights

Select color.
White or Grey are the only available at this time.

Ordering Spec Sheet

Example PS1 - G - C - 1 - P - O1 - X

Model
- PS1
- PS2
- PS3

Color
- G - Grey
- W - White
- DB - Dark Bronze
- B - Black

Mounting Method
- C - Ceiling
- P1* - Pendent 4"
- P2* - Pendent 12"
- P3* - Pendent 24"
- GN* - Goose Neck

Voltage
- 1 - 120v - 277v
- 2* - 480v

Lens
- C - Clear
- P* - Prismatic Model 303
- P1* - Prismatic Model P12
- D* - Drop

Occupancy Options
- O1* - Occupancy Sensor FS305/L2W 10' Mounting
- O2* - Occupancy Sensor FS305/L3W 20' Mounting
- O3* - Occupancy Sensor FS305/L4W 40' Mounting
- O4* - Occupancy Sensor FS355/L2W 10' Mounting
- O5* - Occupancy Sensor FS355/L3W 20' Mounting
- O6* - Occupancy Sensor FS355/L4W 40' Mounting
- X - No Options

Other Options
- BB* - Battery Back-Up
- AF*1 - Antifowl
- X - No Options

PS1	PS2	PS3
Initial Delivered Lumens: 4412	Initial Delivered Lumens: 6760	Initial Delivered Lumens: 8180
System Watts: 79w	System Watts: 116w	System Watts: 136w
Lumens/watts: 55.2	Lumens/watts: 57.2	Lumens/watts: 60
EPA: 0.82 ft²	EPA: 0.80 ft²	EPA: 1.07 ft²
Weight: 20 lbs.	Weight: 35 lbs.	Weight: 50 lbs.

Top & Bottom Dimensions Ceiling Mount Back

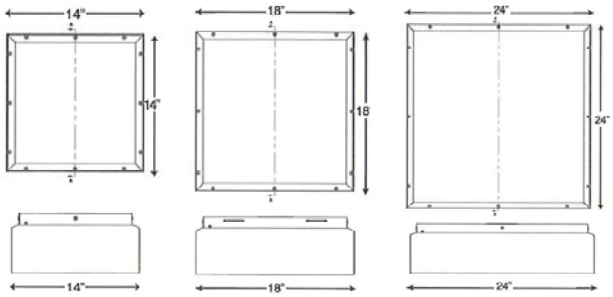

Side Dimensions

NOTES:
* Additional Cost. Please contact your sales rep for additional cost and lead times.
1. Anti Fowl Spikes are sold separately by the foot, must be ordered and installed by end user.

Lumecon Luminance + Economy

For more information, visit www.lumecon.com or call toll free 877 - 564 - 3133 REV. 8/14/09

PHOTOMETRIC

PS1
Luminaire Testing Laboratory, INC.
certified test.
Report #14868
Initial Delivered Lumens: 4412
System Watts: 79w
Lumens/watts: 55.2
Isofootcandle lines of horizontal illumination values based on 20.00 foot mounting height

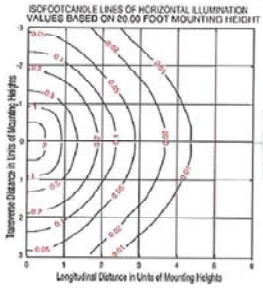

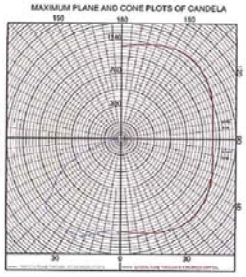

PS2
Luminaire Testing Laboratory, INC.
certified test.
Report #15125
Initial Delivered Lumens: 6760
System Watts: 118w
Lumens/watts: 57.2
Isofootcandle lines of horizontal illumination values based on 20.00 foot mounting height

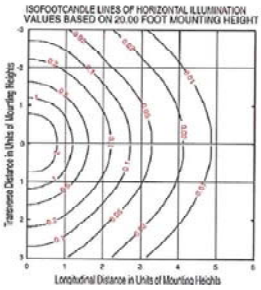

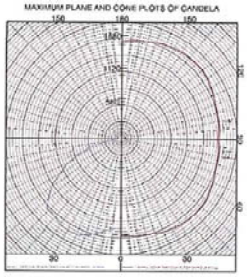

PS3
Luminaire Testing Laboratory, INC.
certified test.
Report #15126
Initial Delivered Lumens: 8160
System Watts: 136w
Lumens/watts: 60
Isofootcandle lines of horizontal illumination values based on 20.00 foot mounting height

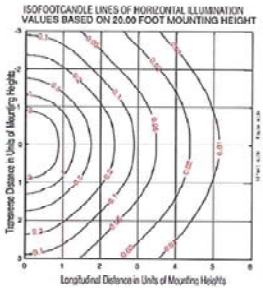

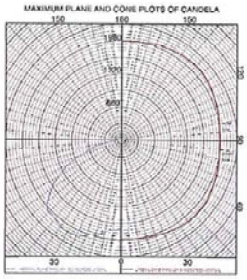

Lumecon Luminance + Economy

For more information, visit www.lumecon.com or call toll free 877 - 564 - 3133 **REV. 8/14/09**

TYPE B
CAT# SND-18-B-40L-S-2

SUNDOWNER™ LED – up to 18 year Maintenance Cycle

Earn LEED Energy Credits

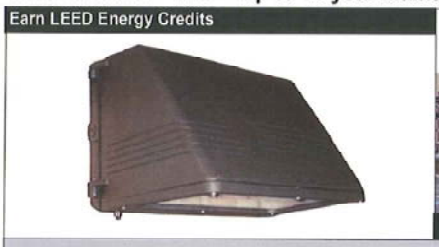

Dick's Sporting Goods

FEATURES	BENEFITS	APPLICATIONS
• Two sizes - four wattages	• Visibility optimized to task	• School facades
• Cut-off Dark Sky optics	• Non-obtrusive	• Commercial buildings
• Use 60% less energy	• Lowest owning cost	• Theaters
• Use 30% less cut-off fixtures	• Lowest first cost	• Universities
• 70,000 Hour System Life	• 16-18 year maintenance cycle	• Indoor walkways
• Diecast aluminum housings	• Durable construction	• Tunnels
• Stainless Steel Hardware	• Long life components	• Parking Structures
• Field replaceable components	• Easily maintainable	• Doorways

Specifications/Features

GENERAL

- Premium constructed LED wall mounted luminaire
- Lowest possible energy
- No maintenance for up to 18 years

CONSTRUCTION

- Die cast hinged front and rear housing
- Built in template for electrical box mounting
- Stainless steel captive fasteners
- Polyester powder finish
- Adaptive LED optics
- Custom colors
- Continuous closed cell captive gasket
- Clear Tempered glass lens
- LED obscuring stippled lens
- Heat sunk LED boards
- Low LED junction temperatures

LISTINGS/ELECTRICAL

- ETL wet location listed for US and Canada
- Electronic LED driver
- Five year limited warranty
- -20°F starting
- 7W, 21W, 35W & 62W sizes

Patent Pending

GUTH® LIGHTING FOR DEMANDING ENVIRONMENTS

SND Optical Advantage

The patent pending optics puts 70% of the light on the task and only 10% hits the wall. The SND20L replaces up to 250MH with almost perfect uniformity and 30% longer spacing ratios.

HID and CFL wallpacks use reflectors to redirect the light. Efficiency is 35%-55%. Of that 20-30% hits the building wall and 15-20% goes straight down.

Page - 03.1

Guth Lighting is a Philips group brand PHILIPS

Photometrics

SND-14B-12L-S
10' mounting - 35' spacing
ITL Test # 14248

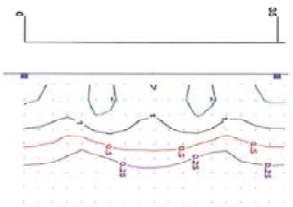

SND-14B-20L-S
10' mounting - 40' spacing
ITL Test #14245

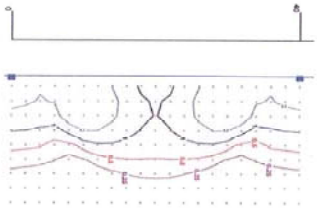

Dimensions - 14" & 18"

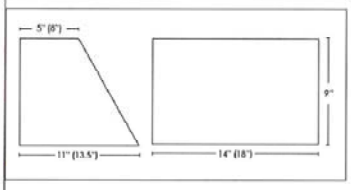

Stippled Lens Hides LED's

SNDR LED Heat Sink

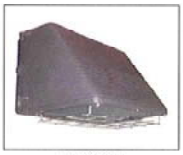

Wire Guard

Poly Guard and Yoke

SUNDOWNER LED Catalogue Numbers

SND 14 B 20L S 1

SND

Size
14 - 14"
18 - 18"

Finish
B - Dark bronze
C - Custom RAL

LEDs
14 Inch
4L - 4 LEDs (7W)
12L - 12 LEDs (21W)
20L - 20 LEDs (35W)
18 Inch
40L - 40 LEDs (62W)

Tempered Lens
S - Stippled glass
G - Clear glass

Voltage
1 - 120V
2 - 277V
3 - 347V

Options

WG	–	wire guard
PG	–	polycarbonate guard
YK	–	adjustable mounting yoke (14" only)
PEC	–	button photocell
PCDIM	–	Adjustable occupancy sensor and photo-control (Watt Stopper PIR EW Series)
MPCDIM	–	master adjustable sensor and photo-control. (1per 20 fixtures –Watt Stopper PIR EN series)

Note: Use Guth GPCF Inverter for emergency lighting

Project Name:

Type	Catalogue Number	Comments

Guth utilizes the services of U.L. and ETL for listing products
Specifications and data are subject to change without notice.

Guth Lighting is a Philips group brand - 03/09

TYPE C
CAT# EG3-2-54-SS5HO-UE

ENCLOSED & GASKETED - ANGLED LENS

EG3

PRODUCT HIGHLIGHTS

- Vaportight design
- High-impact resistant, reinforced fiberglass housing.
- Injection molded hi impact lens acrylic with lineal ribbing as standard. Optional polycarbonate lenses with lineal ribs and prismatic lenses available. Polycarbonate lenses are UV stabilized for outdoor use.
- Lens secured to housing with polycarbonate latches. Eight on the 4' and 5' housings, four on the 2' housings. Optional stainless steel latches are securely spring clipped to the housing, eliminating latch fall off during servicing.
- Gasket is a continuously poured non-toxic, fire resistant, uniform width and thickness for a tight seal.
- Gear tray snaps-in for easy ballast access. Tray is retained by a safety tether attached to inside of housing.
- Stainless steel mounting brackets can be mounted to surface where required, housing snaps into bracket easing installation. Brackets accept V-hooks or M6 mini eyebolt for cable suspension.
- National Sanitation Foundation and Canadian Standards Association approved and listed.

CONSTRUCTION - Inner tray of code-gauge, die-formed, steel. Outer housing molded of high-impact, polyester/fiberglass with inner lip bonded with continuous, compressible, closed-cell neoprene gasketing.

ELECTRICAL - All devices UL/CUL listed. Suitable for damp locations. Damp location emergency pack must be specified separately. Ballasts are energy-saving, solid-state electronic. Ballasts and lampholders replaceable without removing from ceiling. Discrete voltage must be specified for emergency pack options when wired with flex. Where lamps are included as part of the fixture, lamp CRI and color temperature must be specified.

FINISH - All metal parts painted after fabrication following treatment with phosphate rust inhibitor. Finish coating of housing reflecting surfaces is with white, high reflectance (minimum 92%) polyester powder.

PHOTOMETRICS - Please visit our web site at **www.lsi-industries.com** for detailed photometric data.

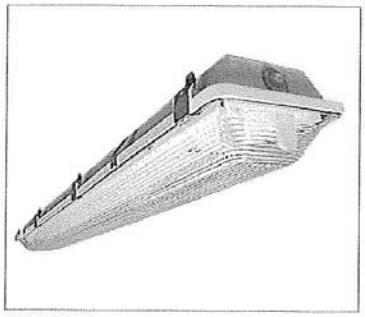

DIMENSIONS

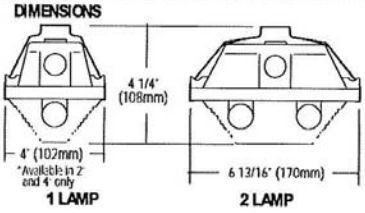

c UL us LISTED

ORDERING INFORMATION

TYPICAL ORDER EXAMPLE: **EG3 1 32 SS010 WL UE**

Prefix	Lamps	Lamp Type	Ballasts	Options	Voltage
EG3	1 2	2 Foot 14 - 14 W T5 24 - 24 W HO T5[1] 17 - 17 W T8 4 Foot 28 - 28 W T5 54 - 54 W HO T5[1] 32 - 32 W T8 5 Foot 35 - 35 W T5 80 - 80 W HO T5[1] 40 - 40 W T8 8 Foot* 28 - 28 W T5 32 - 32 W T8 54 - 54 W T5[1] * Tandem 4' lamp combinations only	SS5 - T5 Instant Start SS5R - T5 Rapid Start SS5D - T5 Dimming (specify type) SS5HO - T5HO SS0D - T8 Dimming (specify type) SS0L - T8 Low Watt SS0HL - T8 High Power Factor SS0R - T8 Rapid Start SS010 - T8 <10% THD Instant Start (For dual ballasts, add "2" Example SS02)	F - Fusing RIF-1 - Radio Interference filter TP - Tamper resistant latches and screws SL - Stainless Steel latches WL - U.L. Listed for Wet Location w/ fitting EM - Emergency Pack EMDL - Emergency Pack damp location PC - Polycarbonate Ribbed Lens WDMWS - Wide Distribution Specular Reflector	120 - 120V 277 - 277V 347 - 347V UE - Universal Electronic (120-277V)

BODY SYLE	LENS OPTIONS ACRYLIC	LENS OPTIONS PC-POLYCARB
1 LAMP 2 FOOT	N/A	S
1 LAMP 4 FOOT	N/A	S
2 LAMP 2 FOOT	N/A	S
2 LAMP 4 FOOT	S	O
3 LAMP 2 FOOT	N/A	S
3 LAMP 4 FOOT	S	O
1 LAMP 8 FOOT	S	N/A
2 LAMP 8 FOOT	S	N/A
3 LAMP 8 FOOT	S	N/A

S-STANDARD O-OPTIONAL N/A-NOT AVAILABLE

FOOTNOTES
1 -Available in 2-lamp version only.

ACCESSORY ORDERING INFORMATION	
Description	**Order Number**
(2) snap-on bails & (2) 10' aircraft cables	EG34AC
(2) snap-on bails & (2) 3' jack chains	EGCHS
(2) snap-on bails & (2) 5' jack chains	EGCHS5

03/20/09

© 2009
LSI INDUSTRIES INC.

Project Name _____ **Fixture Type** _____

Catalog # _____

TYPE CEM
CAT# EG3-2-54-SS5HO-UE W/BODINE

ENCLOSED & GASKETED - ANGLED LENS

EG3

PRODUCT HIGHLIGHTS

- Vaportight design
- High-impact resistant, reinforced fiberglass housing.
- Injection molded hi impact lens acrylic with lineal ribbing as standard. Optional polycarbonate lenses with lineal ribs and prismatic lenses available. Polycarbonate lenses are UV stabilized for outdoor use.
- Lens secured to housing with polycarbonate latches. Eight on the 4' and 5' housings, four on the 2' housings. Optional stainless steel latches are securely spring clipped to the housing, eliminating latch fall off during servicing.
- Gasket is a continuously poured non-toxic, fire resistant, uniform width and thickness for a tight seal.
- Gear tray snaps-in for easy ballast access. Tray is retained by a safety tether attached to inside of housing.
- Stainless steel mounting brackets can be mounted to surface where required, housing snaps into bracket easing installation. Brackets accept V-hooks or M6 mini eyebolt for cable suspension.
- National Sanitation Foundation and Canadian Standards Association approved and listed.

CONSTRUCTION - Inner tray of code-gauge, die-formed, steel. Outer housing molded of high-impact, polyester/fiberglass with inner lip bonded with continuous, compressible, closed-cell neoprene gasketing.

ELECTRICAL - All devices UL/CUL listed. Suitable for damp locations. Damp location emergency pack must be specified separately. Ballasts are energy-saving, solid-state electronic. Ballasts and lampholders replaceable without removing from ceiling. Discrete voltage must be specified for emergency pack options when wired with flex. Where lamps are included as part of the fixture, lamp CRI and color temperature must be specified.

FINISH - All metal parts painted after fabrication following treatment with phosphate rust inhibitor. Finish coating of housing reflecting surfaces is with white, high reflectance (minimum 92%) polyester powder.

PHOTOMETRICS - Please visit our web site at **www.lsi-industries.com** for detailed photometric data.

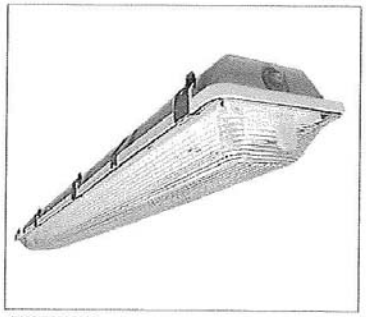

DIMENSIONS

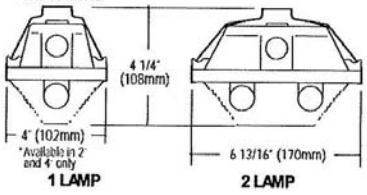

c UL us LISTED

ORDERING INFORMATION

TYPICAL ORDER EXAMPLE: **EG3 1 32 SS010 WL UE**

Prefix	Lamps	Lamp Type	Ballasts	Options	Voltage
EG3	1 2	2 Foot 14 - 14 W T5 24 - 24 W HO T5[1] 17 - 17 W T8 4 Foot 28 - 28 W T5 54 - 54 W HO T5[1] 32 - 32 W T8 5 Foot 35 - 35 W T5 80 - 80 W HO T5[1] 40 - 40 W T8 8 Foot* 28 - 28 W T5 32 - 32 W T8 54 - 54 W T5[1] * Tandem 4' lamp combinations only	SS5 - T5 Instant Start SS5R - T5 Rapid Start SSSD - T5 Dimming (specify type) SSSHO - T5HO SS9D - T8 Dimming (specify type) SS0L - T8 Low Watt SS0HL - T8 High Power Factor SS0R - T8 Rapid Start SS010 - T8 <10% THD Instant Start (For dual ballasts, add "2" Example SS02)	F - Fusing RIF-1 - Radio Interference filter TP - Tamper resistant latches and screws SL - Stainless Steel latches WL - U.L. Listed for Wet Location w/ fitting EM - Emergency Pack EMDL - Emergency Pack damp location PC - Polycarbonate Ribbed Lens WDMWS - Wide Distribution Specular Reflector	120 - 120V 277 - 277V 347 - 347V UE - Universal Electronic (120-277V)

BODY SYLE	LENS OPTIONS	
	ACRYLIC	PC-POLYCARB
1 LAMP 2' FOOT	N/A	S
1 LAMP 4 FOOT	N/A	S
2 LAMP 2 FOOT	N/A	S
2 LAMP 4 FOOT	S	O
3 LAMP 2 FOOT	N/A	S
3 LAMP 4 FOOT	S	O
1 LAMP 8 FOOT	S	N/A
2 LAMP 8 FOOT	S	N/A
3 LAMP 8 FOOT	S	N/A
S-STANDARD O-OPTIONAL N/A-NOT AVAILABLE		

FOOTNOTES
1 -Available in 2-lamp version only.

ACCESSORY ORDERING INFORMATION	
Description	Order Number
(2) snap-on bails & (2) 10' aircraft cables	EG34AC
(2) snap-on bails & (2) 3' jack chains	EGCHS
(2) snap-on bails & (2) 5' jack chains	EGCHS5

03/20/09
©2009
LSI INDUSTRIES INC.

Project Name _____ **Fixture Type** _____
Catalog # _____

TYPE LOBBY
CAT# 48" LINEAR LED LIGHT

LightingScience

Changing the way the world experiences light.

BayLume

This Industrial LED fixture is designed for use in warehouses, stockrooms, parking garages, gyms, tunnels and other applications that require widely distributed, glare free light.

Cool white light and high color rendering index provides excellent visibility which improves both safety and the appearance of your facility.

The light weight, low footprint aluminum fixture and wide range power supply is easy to install with no special ballast or voltage source required.

Features

Fixture Length	24" (616mm)	48" (1225mm)
Lumen Output	3450	6600
Input Power	59W	105W
Efficacy	59 lm/w	63 lm/w
Weight		
24"	11 lbs w/PSU (Pendant Mount)	
48"	18 lbs w/PSU (Pendant Mount)	
Dimensions (including brackets)		
24"	24.25" x 9.5" x 4.5" 616 x 241 x 114.3mm	
48"	48.25" x 9.5" x 4.5" 1225.55 x 241 x 114.3mm	
Color Temperature (CCT)	4980K	
Color Rendering Index (CRI)	70	
Rated Life	70,000 Hours 70% Lumen Maintenance	
Beam Angle	45°	
Lens	Clear Polycarbonate	
Housing	Black Anodized Aluminum	
Mounting Options	Pendant, Surface, Beam	
Operating Temperature	-40°C to +40°C	
Voltage	100-277 Volts AC @ 50-60 Hz	
Warranty	5 Year Limited	
Certification	CE	
Environment	IP66	

Benefits

- Up to three times longer life at approximately half the energy consumption of conventional sources.
- Significantly longer life leads to reduced maintenance and material costs.
- Good color rendering for enhanced visibility and safety.
- Choice of mounting options to meet a variety of architectural forms in horizontal and vertical positions.
- Instant on/instant re-strike.

BYL SP003
Oct 2009

North America Australia Asia Europe 877-999-5742 www.lsgc.com

BayLume

Fixture Tested: 48"

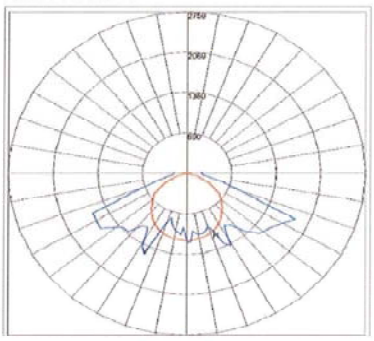

Maximum Candela = 2759.3 Located At Horizontal Angle = 425, Vertical Angle = 65
H - Horizontal Axial Candela
V - Vertical Axial Candela

Zonal Lumen Summary (Lumens)

Zone	Lumens	% Fixt
0–10	100.7	1.5
10–20	282	4.3
20–30	479.4	7.3
30–40	647.7	9.8
40–50	789.5	12
50–60	916	13.9
60–70	1345	20.4
70–80	845.9	12.8
80–90	239.7	3.6

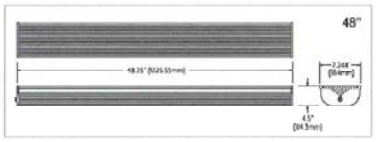

Dimensions shown in inches (mm)

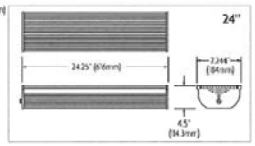

LightingScience®

Lighting Science Group Corporation
1227 S. Patrick Drive BLD 2A
Satellite Beach, FL 32937
t: 877-999-5742
www.lsgc.com

Specifications subject to change.

©2009 Lighting Science Group Corporation. All rights reserved.

BayLume

Ordering Information

Example: BYL CW PLY CLR 24

Product	Color Source	Lens	Mounting	Length*	Options
BYL BayLume	CW Cool White	CLR Clear	PND Pendant SRF Surface BMM Beam	24 24" (610mm) 48 48" (1219.55mm)	DM Dimmable

* See drawing for actual lengths

LightingScience®
Lighting Science Group Corporation
1227 S. Patrick Drive BLDG 2A
Satellite Beach, FL 32937
t: 877-999-5742
www.lsgc.com

Specifications subject to change.

©2009 Lighting Science Group Corporation. All rights reserved.

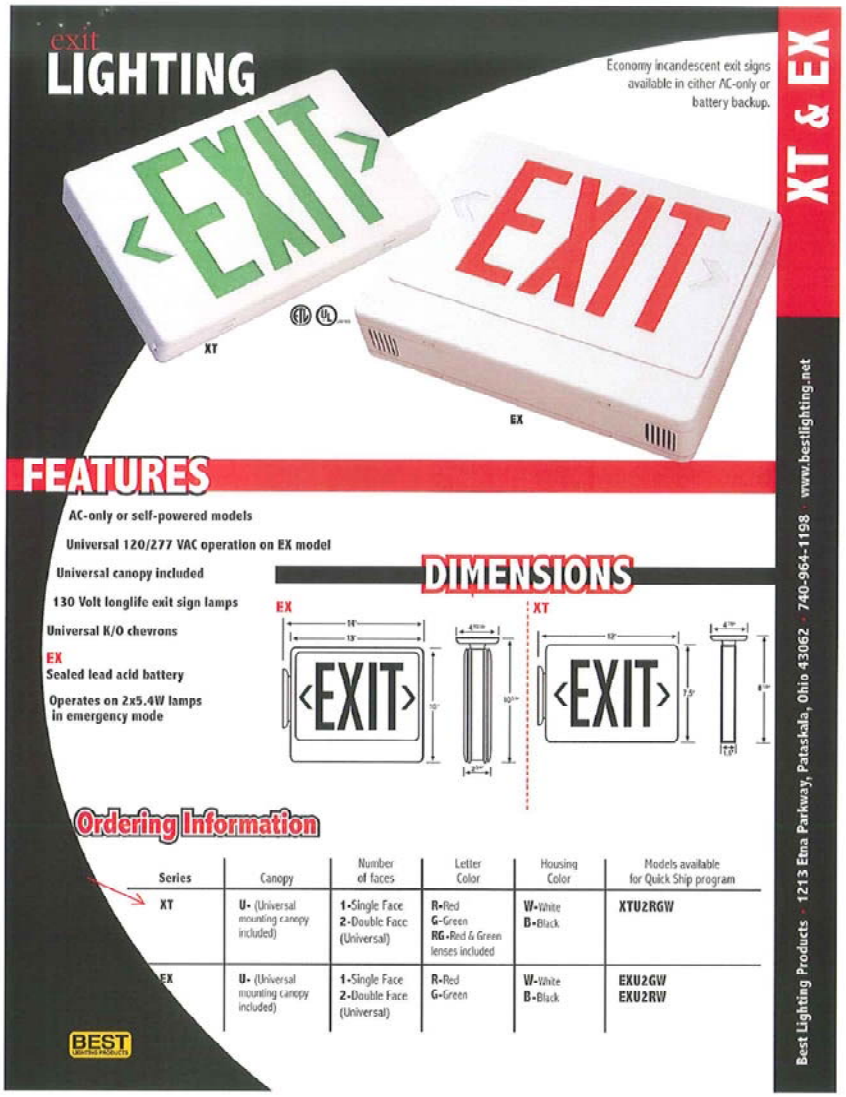
exit
LIGHTING
Economy incandescent exit signs available in either AC-only or battery backup.
XT & EX
XT
EX
FEATURES
AC-only or self-powered models
Universal 120/277 VAC operation on EX model
Universal canopy included
130 Volt longlife exit sign lamps
Universal K/O chevrons
EX
Sealed lead acid battery
Operates on 2x5.4W lamps in emergency mode
DIMENSIONS
EX
XT
Ordering Information
Series
Canopy
Number of faces
Letter Color
Housing Color
Models available for Quick Ship program
XT
U- (Universal mounting canopy included)
1-Single Face
2-Double Face (Universal)
R-Red
G-Green
RG-Red & Green lenses included
W-White
B-Black
XTU2RGW
EX
U- (Universal mounting canopy included)
1-Single Face
2-Double Face (Universal)
R-Red
G-Green
W-White
B-Black
EXU2GW
EXU2RW
BEST
Best Lighting Products · 1213 Etna Parkway, Pataskala, Ohio 43062 · 740-964-1198 · www.bestlighting.net

LIGHTING

LED series exit signs feature an enclosure resistant to corrosive atmospheres, non-hazardous dust environments, water spray and splashing water.

WET LOCATION RATED

TYPE XWP

CWLXTE

WLXTE

WLXTE

FEATURES

- ABS, corrosion-resistant UV stabilized enclosure
- AC only or self-powered models
- Universal 120/277 VAC operation
- Removable directional indicators
- Extremely low operating costs
- 80-Year light source life expectancy
- Meets NFPA Life Safety 101, NEC, OSHA, local and state codes
- Wet location listed

DIMENSIONS

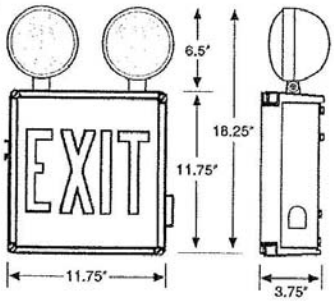

Ordering Information

Catalog Model #	Letter Color	Voltage Input	Lamp Type	Emergency Operation	Battery	Warranty
WLXTER	R-Red	120/277	LED	No	Ni-Cad	5 Years
WLXTEG	G-Green	120/277	LED	No	Ni-Cad	5 Years
WLXTEREM	R-Red	120/277	LED	90 Min.	Ni-Cad	5 Years
WLXTEGEM	G-Green	120/277	LED	90 Min.	Ni-Cad	5 Years
CWLXTEREM	R-Red	120/277	LED/INC	90 Min.	Ni-Cad	5 Years
CWLXTEGEM	G-Green	120/277	LED/INC	90 Min.	Ni-Cad	5 Years

BEST LIGHTING PRODUCTS

Best Lighting Products · 1213 Etna Parkway, Pataskala, Ohio 43062 · 740-964-1198 www.bestlighting.net

BLD-ARE-T4-DA THE EDGE™ LED Area Light – Type IV

TYPE

Beta Catalog #: BLD - ARE - - DA - - LED-B - - -

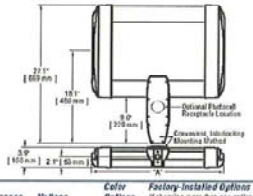

Lightbars	Dim "A"
1	11.7"
2	11.7"
3	13.7"
4	15.7"
5	17.7"
6	19.7"
7	21.7"
8	23.7"
9	25.7"
10	27.7"
11	29.7"
12	31.7"

Product Family	Housing Indicator	Optics	Mounting
➡BLD	➡ARE	➡T4[1] 4B[2]	➡DA[3]

Initial Delivered Lumens (00's)	LED Performance
017	➡LED-B
034	
051	
068	
085	
102	
119	
➡136	
153	
170	
187	
204	

Voltage
➡UL
(120–277V
Universal)
UH
(347–480V
Universal)
12 (12DV)
24 (24DV)
27 (27DV)
34 (34DV)

Color Options
➡SV
BZ
BK
WH
PB

Factory-Installed Options

If choosing more than one option, please type in manually on the lines provided above

36K–3500K Color Temperature[4]
40K–4000K Color Temperature[4]
525–525mA Drive Current[5,6]
700–700mA Drive Current[5,7]
F–Fuse[8]
HL–HALoW (175/350/525, dual circuit input)[9,11]
P–Photocell[9,10]
R–NEMA Photocell Receptacle[10,12]
TL–Two-Level (175/525 w/ integrated sensor control)[9,11]
TL1–Two-Level (350/700 w/ integrated sensor control)[9,11]
TL2–Two-Level (0/560 w/ integrated sensor control)[11]
TL3–Two-Level (0/525 w/ integrated sensor control)[9,11]
TL4–Two-Level (0/700 w/ integrated sensor control)[9,11]

Features

➡1-BS NA type IV distribution
2-BS NA type IV distribution with backlight control
➡3-Direct mounting arm for use with 3-6" square or round pole
4-Color temperature per fixture, minimum 70 CRI
5-Driver operates at 525mA instead of the standard 350mA providing a higher lumen output and a shorter life
6-Available on fixtures with 1-6 light bars
7-Driver operates at 700mA instead of the standard 350mA providing a higher lumen output and a shorter life
8-Not available with TL, TL1, TL2, TL3 or TL4 options when 347–480V is selected
9-Available on 120–277V fixtures with 1–6 light bars and 347–480V fixtures with 2–6 light bars
10-Sensor not included
11-Refer to www.beta-led.com/ca.shtml for more information
12-Not available with HL option when 347–480V is selected
13-Must specify voltage other than UL or UH
14-Not available with TL2, TL3 or TL4 options
15-Not available with TL or TL1 options when 347–480V is selected
16-Five light bar maximum when used with TL option
17-Not available with HL option

LED PERFORMANCE GENERATION B SPECS

# of Light Bars	Initial Delivered Lumens – Type IV	Initial Delivered Lumens – Type IV w/ Backlight Control	System Watts 120–277V	Total Current @ 120V	Total Current @ 208V	Total Current @ 277V	System Watts 347–480V*	Total Current @ 347V	Total Current @ 480V
350mA (Standard), 4000K Color Temperature Fixture Operating at 25° C (77° F)									
1	1,620 (017)	1,180 (017)	29	0.25	0.14	0.13	31	0.09	0.06
2	3,240 (034)	2,360 (034)	50	0.43	0.24	0.21	54	0.16	0.12
3	4,860 (051)	3,543 (051)	78	0.65	0.37	0.25	81	0.23	0.16
4	6,480 (068)	4,720 (068)	100	0.84	0.47	0.41	108	0.30	0.22
5	8,100 (085)	5,900 (085)	115	0.96	0.52	0.44	121	0.35	0.26
6	9,720 (102)	7,080 (102)	130	1.10	0.62	0.52	145	0.42	0.31
7	11,340 (119)	8,260 (119)	164	1.39	0.74	0.63	172	0.50	0.37
8	12,960 (136)	9,440 (136)	187	1.57	0.84	0.71	195	0.59	0.41
9	14,580 (153)	10,620 (153)	208	1.79	0.94	0.80	218	0.64	0.46
10	16,200 (170)	11,800 (170)	230	1.95	1.03	0.88	241	0.71	0.51
11	17,820 (187)	12,980 (187)	254	2.13	1.13	0.96	264	0.77	0.55
12	19,440 (204)	14,160 (204)	277	2.34	1.23	1.03	287	0.86	0.60
525mA 4000K Color Temperature Fixture Operating at 25° C (77° F)									
1	2,171 (017)	1,581 (017)	36	0.32	0.18	0.16	44	0.12	0.11
2	4,340 (034)	3,162 (034)	70	0.59	0.33	0.27	77	0.23	0.16
3	6,513 (051)	4,744 (051)	106	0.89	0.49	0.44	115	0.33	0.25
4	8,683 (068)	6,325 (068)	139	1.16	0.63	0.55	145	0.43	0.32
5	10,854 (085)	7,906 (085)	180	1.54	0.82	0.72	192	0.56	0.41
6	13,024 (102)	9,487 (102)	217	1.82	0.99	0.84	226	0.66	0.49
700mA, 4000K Color Temperature Fixture Operating at 25° C (77° F)									
1	2,590 (017)	1,886 (017)	51	0.43	0.24	0.21	58	0.17	0.14
2	5,181 (034)	3,774 (034)	96	0.81	0.43	0.37	105	0.30	0.23
3	7,775 (051)	5,664 (051)	140	1.23	0.65	0.57	159	0.40	0.34
4	10,366 (068)	7,552 (068)	194	1.61	0.85	0.74	204	0.60	0.43
5	12,960 (085)	9,440 (085)	243	2.04	1.05	0.93	254	0.74	0.53
6	15,552 (102)	11,328 (102)	287	2.43	1.39	1.07	254	0.75	0.54

* Utilizes magnetic step-down transformer

Job Name	DANIA PARKING GARAGE	REQUIRED INFORMATION
Type		
Manufacturer	BETA LIGHTING	
Catalog #	BLD-ARE-T4-DA-136-LED-B-UL-SV	
Voltage	120-277	

sescolighting

Atlanta • Fort Lauderdale • Fort Myers • Jacksonville • Jupiter • Orlando • Puerto Rico • Tallahassee • Tampa • West Palm Beach

www.sescolighting.com

BLD-ARE-T4-DA THE EDGE™ LED Area Light – Type IV

TYPE

General Description

Slim, low profile design minimizes wind load requirements. Fixture sides are rugged cast aluminum with integral, weather-tight LED driver compartments and high performance aluminum heatsinks. Convenient, interlocking mounting method. Mounting housing is rugged die cast aluminum and mounts to 3 – 6" square or round pole. Fixture is secured by two (2) 5/16- 18 UNC bolts spaced on 3" centers. Includes leaf/debris guard. Five-year limited warranty on fixture.

Electrical

Modular design accommodates varied lighting output from high power, white, 6000K (+/- 500K per full fixture), minimum 70 CRI, long life LED sources. 120–277V 50/60 Hz, Class 1 LED drivers are standard. 347–480V 50/60 Hz driver is optional. LED drivers have power factor >90% and THD <20% of full load. Units provided with integral 6kV surge suppression protection standard. Integral weather-tight electrical box with terminal strip for easy power hook-up.

Finish

Exclusive Colortest DuraGuard® finish features an E-Coat epoxy primer with an ultra-durable silver powder topcoat, providing excellent resistance to corrosion, ultraviolet degradation and abrasion. Bronze, black, white and platinum bronze powder topcoats are also available. The finish is covered by our 10-year limited warranty.

Labels

UL listed in the U.S. and Canada for wet locations. Consult factory for CE Certified products. RoHS compliant.

Patents

U.S. Patents D570,534, D576,330, D576,331 and D580,592; Australia Patents 314710, 314711, 316229, 322760 and 322761, German Patent 202007013623.4, Mexico Patent 35801, European Patents 600693924, 600819743 and 601000757; New Zealand Patents 408891 and 408892. U.S. and international patents pending. Design patents/regs. granted and pending.

Field-Installed Accessories

Bird Spikes
XA-BRDSPK

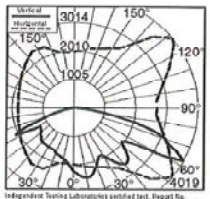

Independent Testing Laboratories certified test. Report No. ITL60924. Candlepower distribution curve of 8 light bar Type IV LED luminaire with 9,720 initial delivered lumens operating at 350mA. All published luminaire photometric testing performed to IESNA LM-79-08 standards.

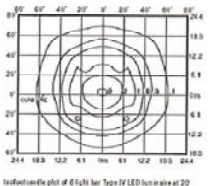

Isofootcandle plot of 8 light bar Type IV LED luminaire at 20' A.F.G. Luminaire with 9,720 initial delivered lumens operating at 350mA. Initial FC at grade.

Output Multipliers

Color Temperature	Lumen Multiplier
5000K (Standard)	1.00
4000K	0.80
3000K	0.75

Drive Current	LED L70 Life* (hours)
175mA	> 150,000
350mA (Standard)	> 150,000
525mA	70,000

* Based on fixture operating at 19° C (59° F).

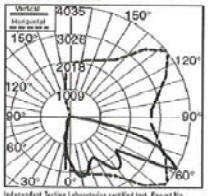

Independent Testing Laboratories certified test. Report No. ITL60924. Candlepower distribution curve of 8 light bar Type IV LED luminaire with backlight control and 7,000 initial delivered lumens operating at 350mA. All published luminaire photometric testing performed to IESNA LM-79-08 standards.

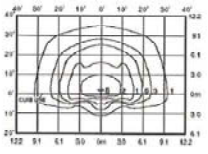

Isofootcandle plot of 8 light bar Type IV LED luminaire with backlight control at 20' A.F.G. Luminaire with 7,000 initial delivered lumens operating at 350mA. Initial FC at grade.

THE EDGE™ LED Area Light EPA & Weight Calculations

Light Bars	Approximate Weight	Single	2@ 180°	2@ 90°	3@ 60°	4@ 90°
Fixed Arm Mount						
1	21.0 lbs.	0.60	1.20	0.87	1.47	1.75
2	23.7 lbs.	0.60	1.20	0.97	1.47	1.75
3	27.0 lbs.	0.60	1.20	0.92	1.51	1.80
4	29.1 lbs.	0.60	1.20	0.94	1.55	1.92
5	32.3 lbs.	0.60	1.20	1.00	1.60	2.00
6	33.6 lbs.	0.60	1.20	1.04	1.64	2.08
7	35.9 lbs.	0.60	1.20	1.08	1.66	2.16
8	41.4 lbs.	0.60	1.20	1.12	1.72	2.24
9	40.1 lbs.	0.60	1.20	n/a*	n/a*	n/a*
10	43.3 lbs.	0.61	1.21	n/a	n/a	n/a
11	46.6 lbs.	0.65	1.29	n/a*	n/a*	n/a*
12	47.6 lbs.	0.69	1.36	n/a*	n/a*	n/a*

* For applications requiring 8 or more light bars at 90 degrees refer to the DL mount version of our spec sheet.

Made in the U.S.A of U.S. and imported parts.
Meets Buy American requirements within the ARRA.

Job Name	DANIA PARKING GARAGE	REQUIRED INFORMATION
Type		
Manufacturer	BETA LIGHTING	
Catalog #	BLD-ARE-T4-DA-136-LED-B-UL-SV	
Voltage	120-277	

SESCO lighting
Atlanta • Fort Lauderdale • Fort Myers • Jacksonville • Jupiter • Orlando • Puerto Rico • Tallahassee • Tampa • West Palm Beach
www.sescolighting.com

KW Industries

TYPE SLA POLE

Page 1 of 4

RTSP18-5.6-11-DM2180-BC-BRZ

RTSP Round Tapered Steel Poles

RTSP

Pole Shaft

The pole shaft is one or two section design, each section being fabricated from standard 11 gauge (0.1196"), 7 gauge (0.1793"), or 3 gauge (0.2391") steel. The pole shaft material is a weldable grade hot rolled commercial quality carbon steel with a guaranteed minimum yield strength of 55,000 psi after fabrication. Each section is one-piece construction with a full length longitudinal weld and is cylindrical in cross-section having a uniform taper of 0.14 inches of diameter change per foot of length.

Base Plate

The anchor base is fabricated from structural quality hot rolled carbon steel plate that meets or exceeds a minimum yield strength of 36,000 psi. The anchor base telescopes the pole shaft and is circumferentially welded top and bottom. All welds are performed in accordance with the American Welding Society specification AWS D1.1, latest edition.

Anchor Bolts

Anchor bolts are fabricated from commercial quality hot rolled carbon steel bar that meets or exceeds a minimum yield strength of 55,000 psi. Four properly sized anchor bolts, each with two regular hex nuts and washers, are furnished and shipped with all poles unless otherwise specified. Anchor bolts shall have the threaded end galvanized a minimum of 8 inches in accordance with ASTM A-153. Fully galvanized anchor bolts are available upon request.

Handhole

An oval reinforced gasketed handhole, having a nominal 3" x 5" or 4" x 6-1/2" inside opening, located 1'-6" above base, is standard on all poles. Optional 5" x 8" and 4" x 10" handholes are available (see options). A grounding provision is located inside the handhole ring.

Finishes

The **Standard Finish** is a polyester thermosetting powder coating applied to the surface of the substrate to a minimum of 3 mils for all color finishes. **Hot dip Galvanized** finish to a ASTM A-123 specification or primed finish is also available. For optional finishes, see **K-KLAD** and **K-KLAD Over Galvanizing**.

HOW TO ORDER

When ordering KW lighting standards, mounting adaptors and accessories, be sure to specify the complete catalog number. Our catalog numbers reflect the precise specifications of the item ordered to ensure our customers will receive the product which meets their exact requirements.
The following explanation of the catalog numbers will be helpful in placing orders:

CATALOG LOGIC - ORDERING SAMPLE

SERIES | NOMINAL HEIGHT | BASE DIAMETER | GAUGE | FINISH | MOUNTING DESIGNATION | OPTIONS

RTSP 30 - 7.5 - 11 - BRZ - DM10 - BC

Catalog Number	Nominal Height	Pole Shaft	Gauge	Handhole Size	Anchor Bolt	Bolt Circle	80 MPH	90 MPH	100 MPH	S W
RTSP10-4.5-11	10	4.5 x 3.1 x 10.0	11	3 x 5.0	0.75 x 17 x 3	8	45.6	37.2	30.7	[illegible]
RTSP12-4.8-11	12	4.8 x 3.1 x 12.0	11	3 x 5.0	0.75 x 17 x 3	8	42.3	34.6	28.6	[illegible]

http://www.kwindustries.com/LightingStandards.asp?Serie=RTSP&Print=Yes 01/14/2009

KW Industries

Page 2 of 4

RTSP14-5.1-11	14	5.1 x 3.1 x 14.0	11	3 x 5.0	0.75 x 17 x 3	8	40	32.7	27	[illegible]
RTSP15-5.4-11	15	5.4 x 3.3 x 15.0	11	3 x 5.0	0.75 x 17 x 3	8	33.5	27	22	1
RTSP16-5.4-11	16	5.4 x 3.1 x 16.0	11	3 x 5.0	0.75 x 17 x 3	8	32.3	26.3	21.6	1
RTSP18-5.6-11	18	5.6 x 3.1 x 18.0	11	3 x 5.0	0.75 x 17 x 3	8	28.6	23.1	18.9	1
RTSP20-5.9-11	20	6.1 x 3.3 x 20.0	11	3 x 5.0	0.75 x 30 x 3	9.5	22.7	18.1	14.6	1
RTSP20-6.5-11	20	6.5 x 3.7 x 20.0	11	4 x 6.5	1.00 x 36 x 4	9.5	42	34	27	1
RTSP20-6.1-11	20	6.1 x 3.3 x 20.0	11	3 x 5.0	0.75 x 30 x 3	9.5	22.7	18.1	14.6	1
RTSP25-6.1-11	25	6.1 x 2.6 x 25.0	11	3 x 5.0	0.75 x 30 x 3	9.5	16.7	13.3	10.6	1
RTSP25-6.6-11	25	6.8 x 3.3 x 25.0	11	4 x 6.5	0.75 x 30 x 3	10	18.9	14.8	11.6	1
RTSP25-7.0-11	25	6.8 x 3.3 x 25.0	11	4 x 6.5	1.00 x 36 x 4	10	35	24.6	20	2
RTSP25-7.5-11	25	7.5 x 4.0 x 25.0	11	4 x 6.5	1.00 x 36 x 4	10.5	42	32	26	2
RTSP25-6.8-11	25	6.8 x 3.3 x 25.0	11	4 x 6.5	0.75 x 30 x 3	10	27	21	15	2
RTSP30-6.8-11	30	6.8 x 2.6 x 30.0	11	4 x 6.5	0.75 x 30 x 3	10	14	10.8	8.3	2
RTSP30-7.5-11	30	7.5 x 3.3 x 30.0	11	4 x 6.5	1.00 x 36 x 4	10.5	22.1	17.5	13.9	2
RTSP30-8.0-11	30	8.1 x 3.9 x 30.0	11	4 x 6.5	1.00 x 36 x 4	11	24.8	19.4	15.3	2
RTSP30-8.5-11	30	8.5 x 4.3 x 30.0	11	4 x 6.5	1.00 x 36 x 4	11.5	29.1	22.8	18	3
RTSP30-9.0-11	30	9.0 x 4.8 x 30.0	11	4 x 6.5	1.00 x 36 x 4	12.5	32.5	25.5	20.1	3
RTSP30-9.0-7	30	9.0 x 4.8 x 30.0	7	4 x 6.5	1.25 x 42 x 6	12.5	54.5	43.6	35.3	4
RTSP30-10.0-11	30	10.0 x 5.8 x 30.0	11	4 x 6.5	1.00 x 36 x 4	13.5	41	31.5	24	3
RTSP30-11.0-7	30	11.0 x 6.8 x 30.0	7	4 x 6.5	1.25 x 42 x 6	15	62	47	37	7
RTSP35-7.5-11	35	7.5 x 2.6 x 35.0	11	4 x 6.5	1.00 x 36 x 4	10.5	15.7	12.3	9.7	2
RTSP35-8.0-11	35	8.1 x 3.2 x 35.0	11	4 x 6.5	1.00 x 36 x 4	11	17.3	13.4	10.4	3
RTSP35-8.5-11	35	8.5 x 3.6 x 35.0	11	4 x 6.5	1.00 x 36 x 4	11.5	21.8	16.9	13.1	3
RTSP35-9.0-11	35	9.0 x 4.1 x 35.0	11	4 x 6.5	1.00 x 36 x 4	12.5	24.6	19	14.7	3
RTSP35-9.0-7	35	9.0 x 4.1 x 35.0	7	4 x 6.5	1.25 x 42 x 6	12.5	42.3	33.7	27.1	5
RTSP35-10.0-11	35	10.0 x 4.5 x 35.0	11	4 x 6.5	1.00 x 36 x 4	13.5	31	23	17	4
RTSP35-11.0-7	35	11.0 x 6.1 x 35.0	7	4 x 6.5	1.25 x 42 x 6	15	62	47	37	7
RTSP39-8.1-11	39	8.1 x 2.6 x 39.0	11	4 x 6.5	1.00 x 36 x 4	11	13.7	10.5	8	3
RTSP39-9.0-11	39	9.0 x 3.5 x 39.0	11	4 x 6.5	1.00 x 36 x 4	12.5	19.6	14.9	11.2	3
RTSP39-9.0-7	39	9.0 x 3.5 x 39.0	7	4 x 6.5	1.25 x 42 x 6	12.5	37.5	29	22.5	5
RTSP39-10.0-11	39	10.0 x 4.5 x 39.0	11	4 x 6.5	1.00 x 36 x 4	13.5	26	18	17	4
RTSP39-11.0-7	39	11.0 x 5.5 x 39.0	7	4 x 6.5	1.25 x 42 x 6	15	47	36.5	28.4	7
RTSP39-14.0-7	39	14.0 x 8.5 x 39.0	7	4 x 6.5	1.50 x 54 x 6	20	101.8	80	63.5	1
RTSP39-12.0-7	39	12.0 x 6.5 x 39.0	7	4 x 6.5	1.50 x 54 x 6	16	85	67	52	9
RTSP45-10.0-11	45	10.0 x 4.6 x 39.0 5.02 x 3.9 x 7.75	11 11	4 x 6.5	1.00 x 36 x 4	13.5	18.3	13.2	9.3	4
RTSP45-11.0-7	45	11.0 x 5.5 x 39.0 6.10 x 4.9 x 8.30	7 11	4 x 6.5	1.25 x 42 x 6	15	36.8	28.5	22	8
RTSP45-12.0-7	45	12.0 x 7.8 x 30.0 8.5 x 5.95 x 18.25	7 11	4 x 6.5	1.5 x 54 x 6	16	66	50	39	1
RTSP45-12.5-3	45	12.5 x 8.3 x 30.0 9.0 x 6.6 x 17.4	3 7	4 x 6.5	1.50 x 54 x 6	16.5	70	54	41	1
RTSP45-14.0-7	45	14.0 x 8.3 x 41.0 9.0 x 8.0 x 7.0	7 11	4 x 6.5	1.50 x 54 x 6	20	80	60	45	1
RTSP45-14.0-3	45	14.0 x 8.3 x 41.0 9.0 x 8.0 x 7.0	3 7	4 x 6.5	1.75 x 84 x 6	20	113	87	68	1
RTSP50-10.0-11	50	10.0 x 4.6 x 39.0 5.02 x 3.2 x 12.75	11 11	4 x 6.5	1.00 x 36 x 4	13.5	12.9	8.9	5.7	5
RTSP50-11.0-7	50	11.0 x 5.5 x 39.0 6.10 x 4.2 x 13.3	7 11	4 x 6.5	1.25 x 42 x 6	15	27.3	20.6	15.4	8
RTSP50-12.0-7	50	12.0 x 7.8 x 30.0 8.5 x 5.3 x 23.25	7 11	4 x 6.5	1.50 x 54 x 6	16	42.1	33.4	26.8	9
RTSP50-14.0-7	50	14.0 x 8.3 x 41.0 9.0 x 7.3 x 12.0	7 11	4 x 6.5	1.50 x 54 x 6	20	64	47	34	1
RTSP50-14.0-3	50	14.0 x 8.3 x 41.0 9.0 x 7.3 x 12.0	3 7	4 x 6.5	1.75 x 54 x 6	20	93	72	55	1
RTSP50-12.5-3	50	12.5 x 8.3 x 30.0 9.0 x 5.9 x 22.4	3 7	4 x 6.5	1.50 x 54 x 6	16.5	27.4	19	12.6	1
RTSP55-12.0-7	55	12.0 x 7.8 x 30.0 8.5 x 4.6 x 28.25	7 11	4 x 6.5	1.50 x 54 x 6	16	21	19	13	9
RTSP55-14.0-7	55	14.0 x 8.5 x 39.0 9.00 x 6.5 x 17.8	7 11	4 x 6.5	1.50 x 54 x 6	20	33.2	23.4	15.9	1

http://www.kwindustries.com/LightingStandards.asp?Serie=RTSP&Print=Yes 01/14/2009

KW Industries

Page 3 of 4

RTSP55-12.5-3	55	12.5 x 8.3 x 30.0 9.00 x 5.2 x 27.4	3 7	4 x 6.5	1.50 x 54 x 6	16.5	27.4	19	12.6	1
RTSP55-14.0-3	55	14.0 x 8.3 x 41.0 9.00 x 6.7 x 16.7	3 7	4 x 6.5	1.75 x 84 x 6	20	50.4	37.5	27.6	1
RTSP60-12.0-7	60	12.0 x 7.8 x 30.0 8.5 x 3.8 x 33.25	7 11	4 x 6.5	1.50 x 54 x 6	16	15.7	11.2	7.9	1
RTSP60-14.0-7	60	14.0 x 8.5 x 39.0 9.00 x 5.8 x 22.6	7 11	4 x 6.5	1.50 x 54 x 6	20	26.7	17.9	11.2	1
RTSP60-12.5-3	60	12.5 x 8.3 x 30.0 9.00 x 4.5 x 32.4	3 7	4 x 6.5	1.50 x 54 x 6	16.5	21.9	14.4	8.8	1
RTSP60-14.0-3	60	14.0 x 8.3 x 41.0 9.00 x 6.0 x 21.7	3 7	4 x 6.5	1.75 x 84 x 6	20	41.8	30.3	21.5	1
RTSP65-14.0-7	65	14.0 x 8.5 x 39.0 9.00 x 5.1 x 27.6	7 11	4 x 6.5	1.50 x 54 x 6	20	21.1	13.3	7.3	1
RTSP65-12.5-3	65	12.5 x 8.3 x 30.0 9.00 x 3.8 x 37.4	3 7	4 x 6.5	1.50 x 54 x 6	16.5	17.2	10.6	5.6	1
RTSP65-14.0-3	65	14.0 x 8.3 x 41.0 9.00 x 5.3 x 26.7	3 7	4 x 6.5	1.75 x 84 x 6	20	34.5	24.3	16.5	1
RTSP70-14.0-7	70	14.0 x 8.5 x 39.0 9.00 x 4.4 x 32.6	7 11	4 x 6.5	1.50 x 54 x 6	20	15.6	8.9	3.7	1
RTSP70-14.0-3	70	14.0 x 8.3 x 41.0 9.00 x 4.6 x 31.7	3 7	4 x 6.5	1.75 x 84 x 6	20	26.8	18.1	11.4	1

FINISHES

Standard		Galvanized		K-KLAD		K-KLAD Over Galvanizing	
BRZ	Bronze	G	Galvanized	K813	Bronze	KZ13	Bronze
BLK	Black			K821	Black	KZ21	Black
GRY	Gray			K841	Gray	KZ41	Gray
GRN	Green			K891	Green	KZ91	Green
WHT	White			K881	White	KZ81	White
P	Primed			K845	Natural Aluminum	KZ45	Natural Aluminum
NA	Natural Aluminum						
	1 YEAR WARRANTY				5 YEAR WARRANTY		10 YEAR WARRANTY

MOUNTING DESIGNATIONS

Tenon Mount		Drill Mount	
2	2 3/8 " x 4 " TENON	DM10	Drilled for 1 Luminaire
3	2 7/8 " x 4 " TENON	DM2090	Drilled for 2 Luminaires @ 90°
3.5	3 1/2 " x 6 " TENON	DM2180	Drilled for 2 Luminaires @ 180°
4	4 " x 6 " TENON	DM3090	Drilled for 3 Luminaires @ 90°
		DM3120	Drilled for 3 Luminaires @ 120°
		DM4090	Drilled for 4 Luminaires @ 90°

Gain Mount		Open Mount	
GMT4	attachment for CXA	OT	Open Top
GMT9	attachment for CXASQ	OTC	Open Top includes Pole Cap

OPTIONS

There are numerous options that can be ordered. Please indicate these selections under the options column in the catalog number. Example: CPL-WPR2-BC-CS-SC.

Accessories

http://www.kwindustries.com/LightingStandards.asp?Serie=RTSP&Print=Yes 01/14/2009