APPENDIX E
ELEVATORS

ARCHITECTURAL DATA

CAR INSIDE DIMENSIONS HANDICAP AND STRETCHER CODES:

A. CAR INTERIOR DIMENSIONS FOR WHEELCHAIR TURNING SHALL BE 68" X 54" MINIMUM. THE MINIMUM DISTANCE FROM THE REARWALL TO THE RETURN PANEL SHALL BE 51".

B. THE CAR INTERIOR DIMENSIONS FOR ACCOMMODATING STRETCHER IN THE HORIZONTAL POSITION SHALL BE 80" X 54" MINIMUM. THE MINIMUM DISTANCE FROM THE RETURN PANEL SHALL BE 51"

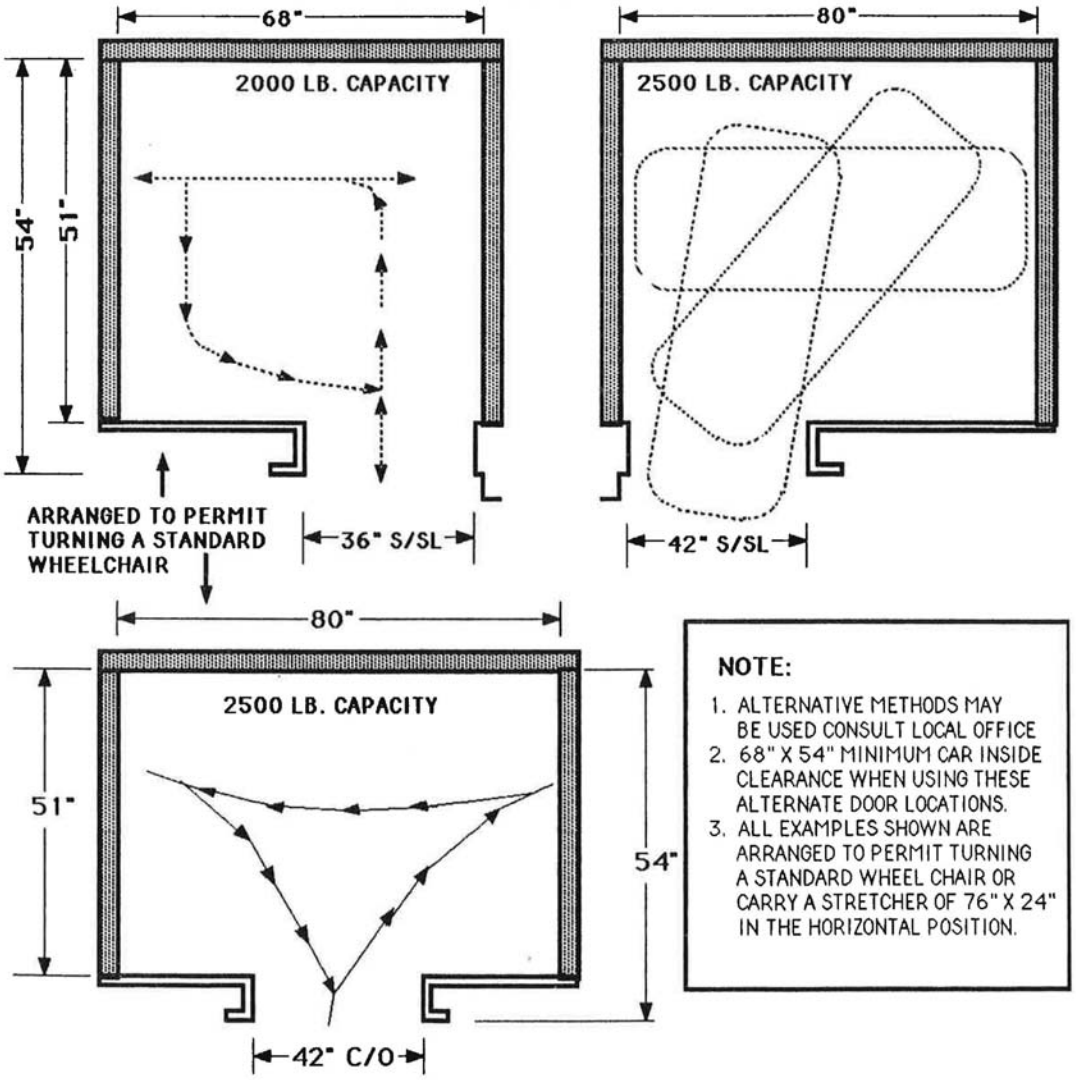

NOTE:

1. ALTERNATIVE METHODS MAY BE USED CONSULT LOCAL OFFICE
2. 68" X 54" MINIMUM CAR INSIDE CLEARANCE WHEN USING THESE ALTERNATE DOOR LOCATIONS.
3. ALL EXAMPLES SHOWN ARE ARRANGED TO PERMIT TURNING A STANDARD WHEEL CHAIR OR CARRY A STRETCHER OF 76" X 24" IN THE HORIZONTAL POSITION.

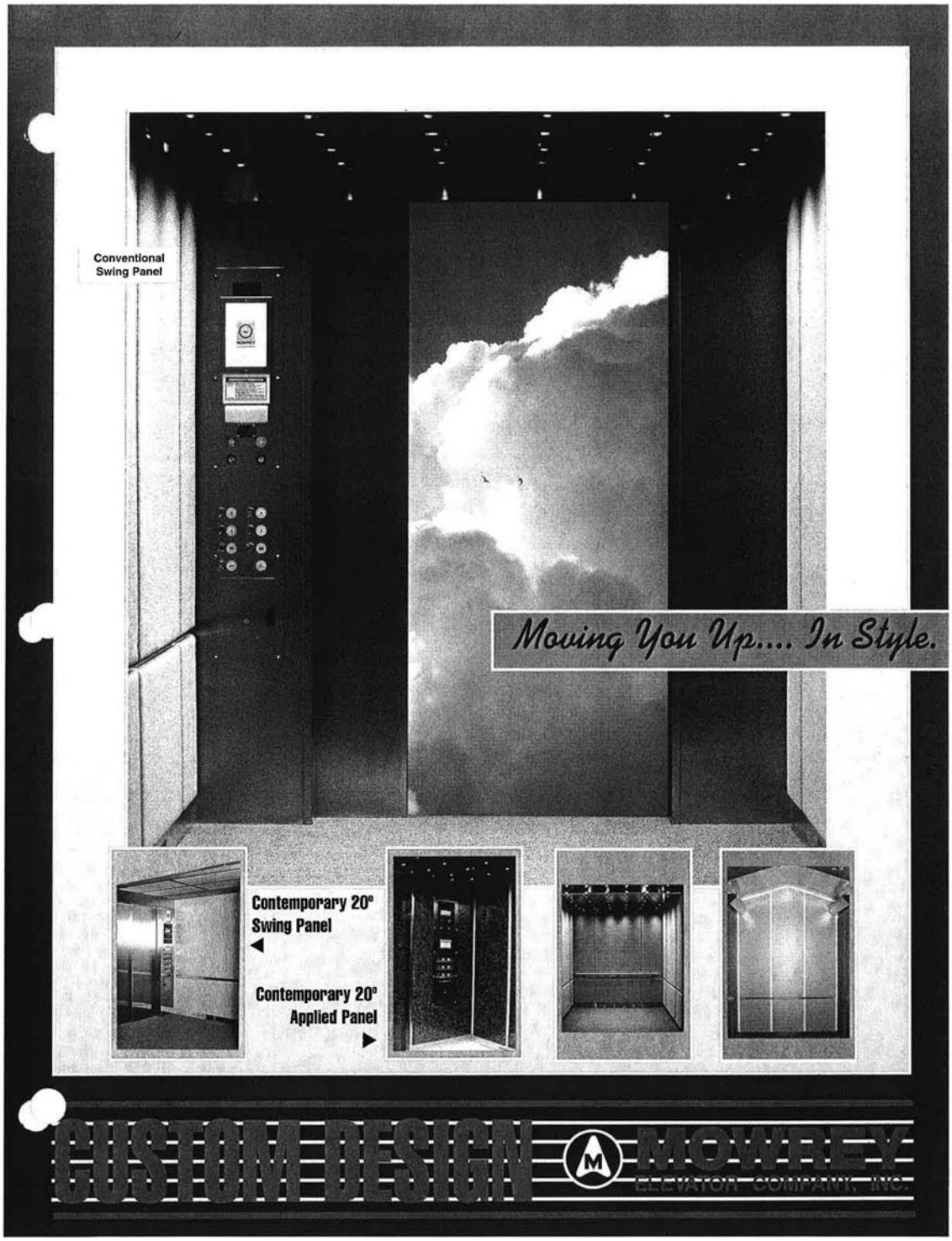
Conventional Swing Panel
Moving You Up.... In Style.
Contemporary 20° Swing Panel
Contemporary 20° Applied Panel
CUSTOM DESIGN
MOWHEY
ELEVATOR COMPANY, INC.

ARCHITECTURAL DATA

LAYOUT REQUIREMENTS FOR DIRECT PLUNGER HYDRAULIC GENERAL PURPOSE PASSENGER ELEVATORS CAPACITY OF 2100 - 4000 LBS.

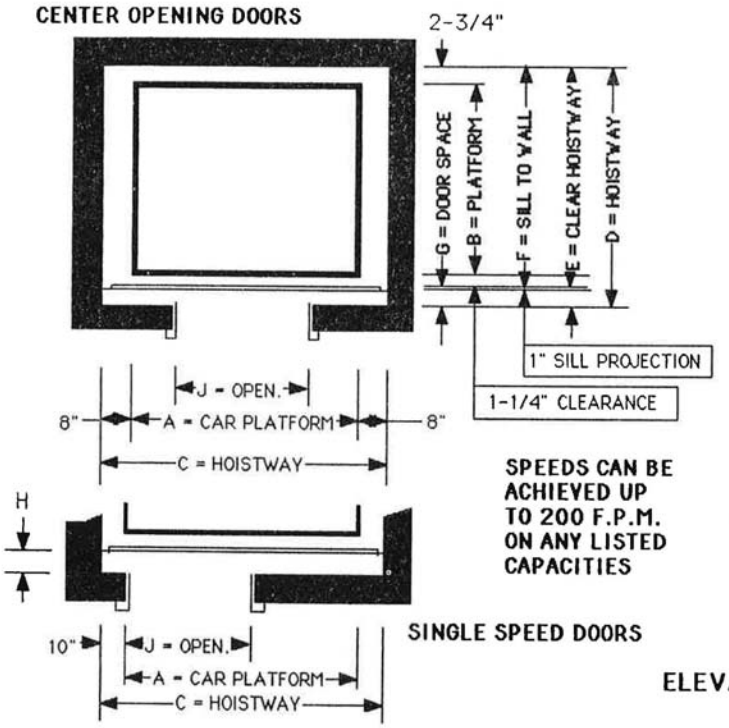

SPEEDS CAN BE ACHIEVED UP TO 200 F.P.M. ON ANY LISTED CAPACITIES

SINGLE SPEED DOORS

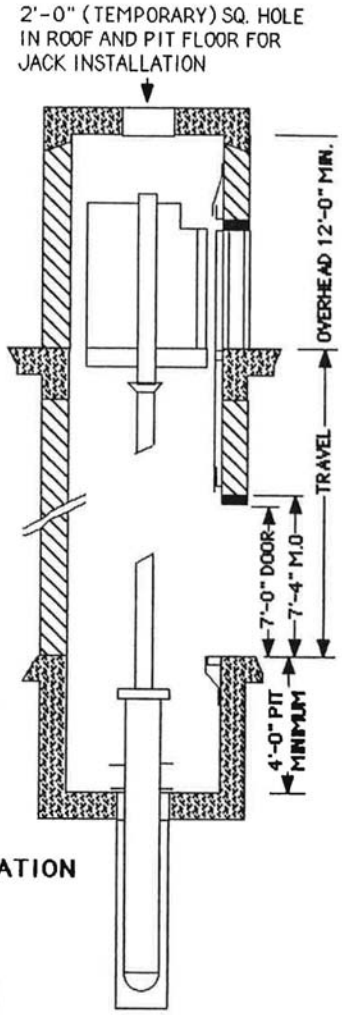

ELEVATION

DIMENSIONS

CAPACITY IN LBS.	A	B	C	D	E	F	G	H	J
2100*	6'-0"	5'-0"	7'-4"	5'-9"	5'-5"	5'-4"	5"	4"	3'-0"
2500**	7'-0"	5'-0"	8'-4"	5'-9"	5'-5"	5'-4"	5"	4"	3'-6"
3000	7'-0"	5'-6"	8'-4"	6'-3"	5'-11"	5'-10"	5"	4"	3'-6"
3500	7'-0"	6'-2"	8'-4"	6'-11"	6'-7"	6'-6"	5"	4"	3'-6"
4000	8'-0"	6'-2"	9'-4"	6'-11"	6'-7"	6'-6"	5"	4"	4'-0"

* COMPLIES WITH WHEELCHAIR CODE CAN BE USED IN BLDGS. UP TO 2 STORIES
** COMPLIES WITH STRETCHER CODE MUST BE USED IN BLDGS. 3 STORIES AND UP

NOTES:

1. WITH REAR OPENINGS DIMENSIONS G,H,J, APPLY AT BOTH FRONT AND REAR, AND DIMENSIONS D,E,F ADJUST ACCORDINGLY.
2. FOR LOCATION AND SIZE OF MACHINE ROOM CONSULT LOCAL OFFICE.
3. 2'-0" SQUARE OPENING REQUIRED IN PIT FLOOR FOR SETTING HYDRAULIC CYLINDER.
4. PROPER SUPPORTS FOR RAIL BRACKETS BY OTHERS

ARCHITECTURAL DATA

LAYOUT REQUIREMENTS FOR DIRECT PLUNGER HYDRAULIC GENERAL PURPOSE PASSENGER ELEVATORS CAPACITY OF 2000- 3500 IBS. FRONT AND REAR OPENINGS

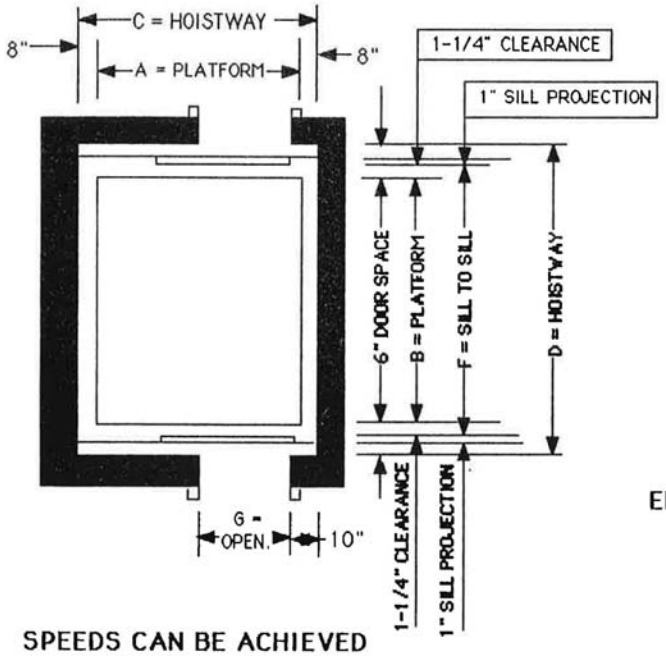

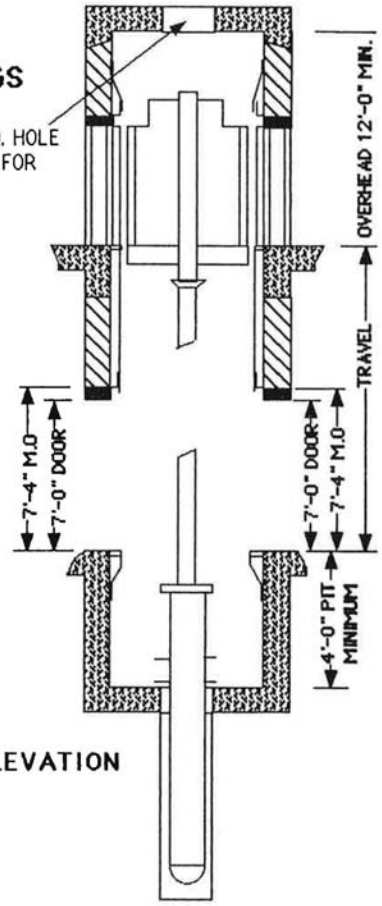

ELEVATION

SPEEDS CAN BE ACHIEVED UP TO 200 F.P.M. ON ANY LISTED CAPACITIES.

NOTES:

1. "C" DIMENSION BASED ON RAIL BRKTS. 14'-0" APART.
2. FOR LOCATION AND SIZE OF MACHINE ROOM CONSULT LOCAL OFFICE.
3. 2'-0" X 2'-0" SQUARE HOLE REQUIRED IN PIT FLOOR FOR SETTING HYDRAULIC CYLINDER.
4. PROPER SUPPORTS FOR RAIL BRACKETS BY OWNER.

DIMENSIONS

CAPACITY IN LBS.	A	B	C	D	F	G
FRONT AND REAR OPENINGS ONLY						
2000	6'-0"	5'-7"	7'-4"	6'-8"	5'-10"	3'-0"
2500	7'-0"	5'-7"	8'-4"	6'-8"	5'-10"	3'-6"
3000	7'-0"	6'-1"	8'-4"	7'-2"	6'-4"	3'-6"
3500	7'-0"	6'-9"	8'-4"	7'-10"	7'-0"	3'-6"

ARCHITECTURAL DATA

LAYOUT REQUIREMENTS FOR DIRECT PLUNGER HYDRAULIC HOSPITAL ELEVATORS CAPACITY 3500-4000- 4500 IBS.

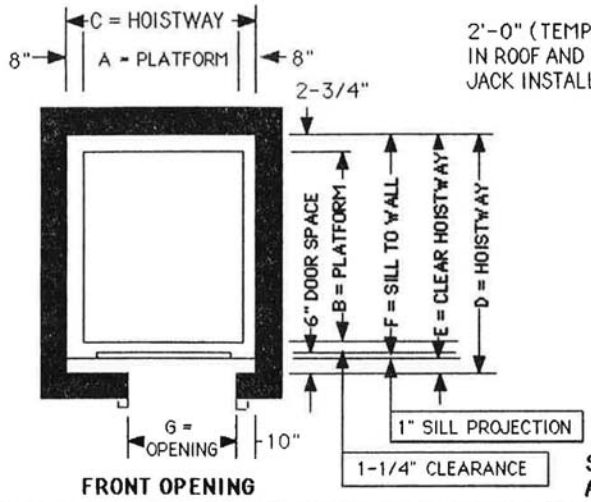

FRONT OPENING

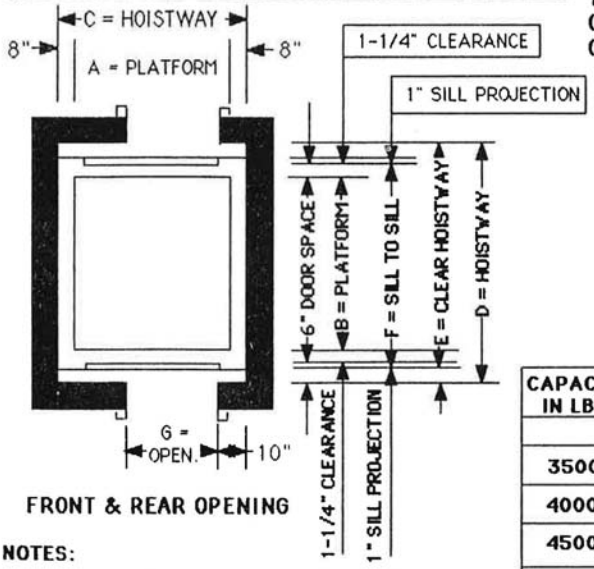

FRONT & REAR OPENING

2'-0" (TEMPORARY) SQ. HOLE IN ROOF AND PIT FLOOR FOR JACK INSTALLATION

SPEEDS CAN BE ACHIEVED UP TO 200 F.P.M. ON ANY LISTED CAPACITIES.

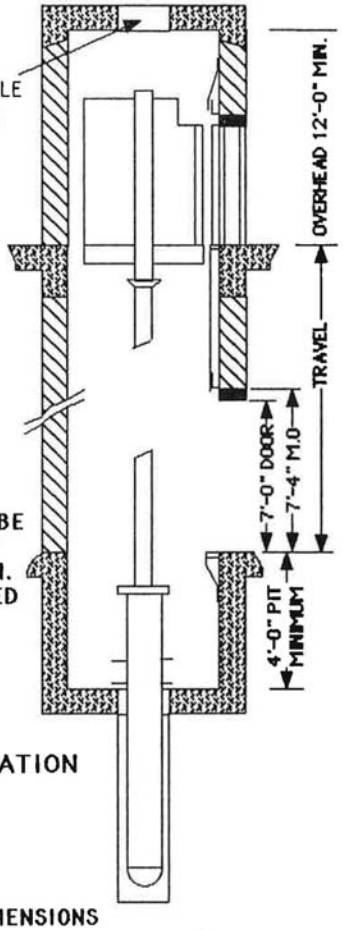

ELEVATION

NOTES:

1. "C" DIMENSION BASED ON RAIL BRKTS. 14'-0" APART.
2. FOR LOCATION AND SIZE OF MACHINE ROOM CONSULT LOCAL OFFICE.
3. 2'-0" X 2'-0" SQUARE HOLE REQUIRED IN PIT FLOOR FOR SETTING HYDRAULIC CYLINDER.
4. PROPER SUPPORTS FOR RAIL BRACKETS BY OWNER.

DIMENSIONS

CAPACITY IN LBS.	A	B	C	D	E	F	G
FRONT OPENINGS ONLY							
3500	5'-4"	8'-4"	7'-2"	9'-2"	8'-9"	8'-8"	3'-10"
4000	5'-8"	8'-8"	7'-6"	9'-6"	9'-1"	9'-0"	4'-0"
4500	5'-10"	9'-0"	7'-8"	9'-10"	9'-5"	9'-4"	4'-0"
FRONT & REAR OPENINGS							
3500	5'-4"	8'-4"	7'-2"	10'-0"	9'-2"	9'-0"	3'-10"
4000	5'-8"	8'-8"	7'-6"	10'-4"	9'-6"	9'-4"	4'-0"
4500	5'-10"	9'-0"	7'-8"	10'-9"	9'-11"	9'-9"	4'-0"

DESIGN OPTIONS TO MATCH YOUR FANCY

Shown here is a representation of the wide array of custom options available to you. You may choose any of our pre-engineered options and customize it to your specific decor needs by selecting the finish and material you desire. Additionally, Mowrey Elevator Company will design or build custom fixtures or details to your specifications.

Ceilings: Suspended frames come standard in natural brushed aluminum and are available in brushed or polished stainless steel and bronze as well as painted.

Drop panels are available in everything from the standard metals to fancy wood veneers.

Front Return and Control Panels: Available as either applied car stations for cost savings or swing returns. The control station can be designed either with contemporary 20 degree square button series or traditional round buttons. Any combination is available in stainless steel or bronze.

Flooring: 1/16 vinyl composition tile is standard or a commercial grade carpeting in a standard selection of colors may be installed. For other custom floor finishes we will prepare the sub-floor and set the base height to accommodate your requirements.

Walls: For the ME 200 Series you may choose any available standard high pressure plastic laminate as standard or you may customize it with any properly fire rated material; including mirrored panels. The ME 225 Series gives you the same options, plus your choice of finish for the reveals.

Handrails: Standard options include 2″ continuous flat bar in stainless steel or 1″ x 6″ oak plank. Other options including cylindrical metal are available upon request.

Our experienced salesforce and staff is available to help design custom interiors, from the very basic to the exquisite.

Provisions for Handicapped: All dimensions and location of car station, telephone box and handrail comply with the requirements of ASME/ANSI A.17.1 Code for the use of the physically handicapped. All floors are designated by braille buttons.

Electric Service: Power supply, 3 phase, 60 cycle. Single phase option available.

National Code: Mowrey Elevator includes all requirement by the Safety Code for Elevators and Escalators (ASME/ANSI A.17.1).

The above listed options are only suggestions for cab upgrades. Mowrey Elevator has the availability to meet any design needs and any completion schedule.

ost Office Box 290067
Davie, Florida 33329
954/581-8900
1-800-432-2966 (Within FL)
Fax: 954/583-1119

MOWREY
ELEVATOR COMPANY, INC.

Attention - New Address:
Mowrey Elevator Company, E.M.A.C.
4518 Lafayette Street
Marianna, Florida 32446
1-800-441-4449 (North FL)
Fax: 850/482-2482

ARCHITECTURAL DATA

LAYOUT REQUIREMENTS FOR HOLELESS PLUNGER HYDRAULIC GENERAL PURPOSE PASSENGER ELEVATORS CAPACITY OF 2100 - 2500 LBS.

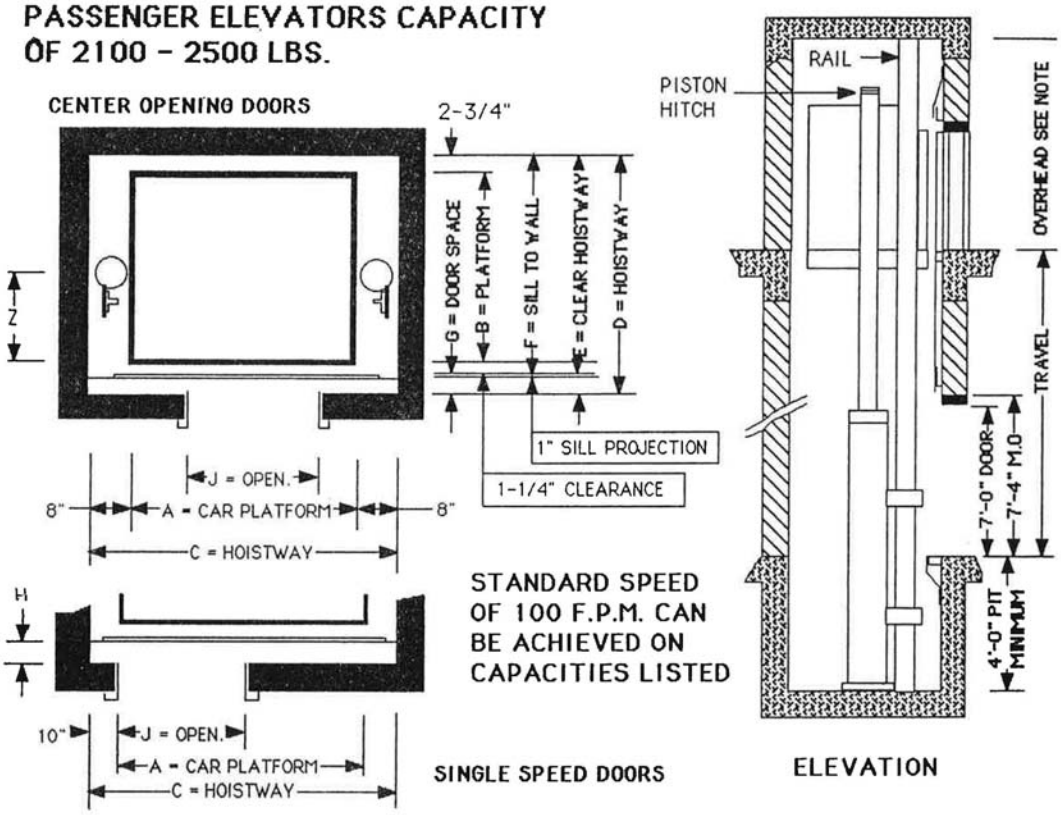

DIMENSIONS

CAPACITY IN LBS.	A	B	C	D	E	F	G	H	J	Z
2100	6'-0"	5'-0"	7'-4"	5'-9"	5'-5"	5'-4"	5"	4"	3'-0"	2'-6"
2500	7'-0"	5'-0"	8'-4"	5'-9"	5'-5"	5'-4"	5"	4"	3'-6"	2'-6"

NOTES:

1. WITH REAR OPENING DIMENSIONS G,H, AND J APPLY AT BOTH FRONT AND REAR, AND DIMENSIONS D,E, AND F ADJUST ACCORDINGLY.
2. FOR LOCATION AND SIZE OF MACHINE ROOM CONSULT LOCAL OFFICE.
3. PROPER SUPPORTS FOR RAIL BRACKETS BY OWNER.
4. FOR PROPER OVERHEAD DIMENSION CONSULT LOCAL OFFICE.

ARCHITECTURAL DATA

INDUSTRY STANDARDS FOR HANDICAPPED APPLICATIONS
CAPACITIES --- DOOR OPENINGS --- MINIMUM CAR INSIDE DIMENSIONS

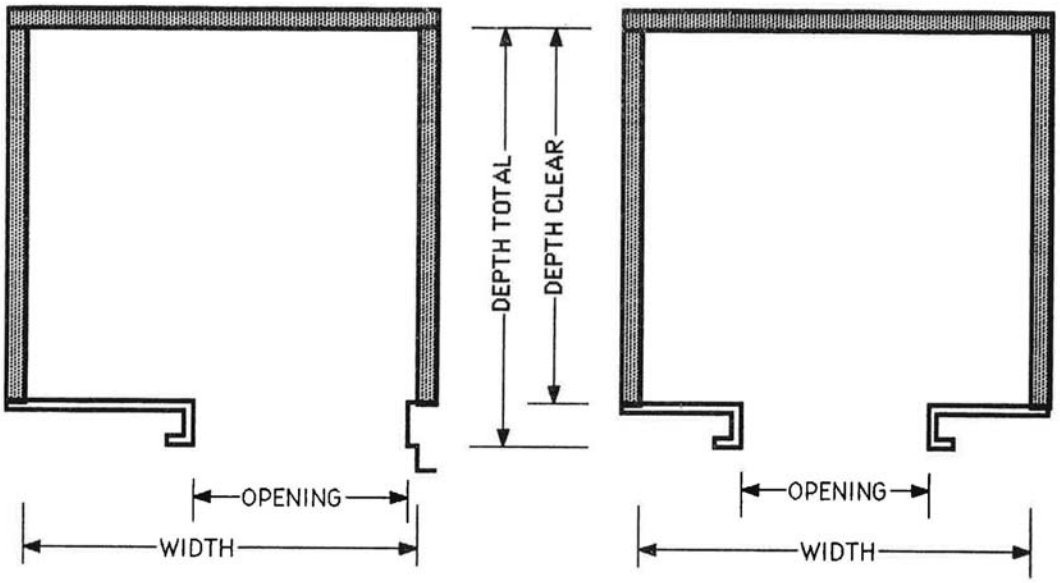

CAPACITY LBS.	WIDTH	DEPTH		OPENING	
		TOTAL	CLEAR	S/SLIDE	C/O
2000	68"	54"	51"	*36"	---
2500	80"	54"	51"	**42"	*42"
3000	80"	60"	55"	**42"	*42"
3500	80"	68"	63"	**42"	*42"
4000	92"	68"	63"	---	**48"

* THIS COMBINATION OF CAR SIZE AND DOOR OPENING PERMITS TURNING A WHEEL CHAIR.

** THIS COMBINATION OF CAR SIZE AND DOOR OPENING PERMITS TURNING A WHEELCHAIR AND ACCOMIDATES A 76" X 24" AMBULANCE TYPE STRETCHER IN THE HORIZONTAL POSITION.

ARCHITECTURAL DATA

INDUSTRY STANDARDS FOR HANDICAPPED APPLICATIONS
CAPACITIES --- DOOR OPENINGS --- MINIMUM CAR INSIDE DIMENSIONS

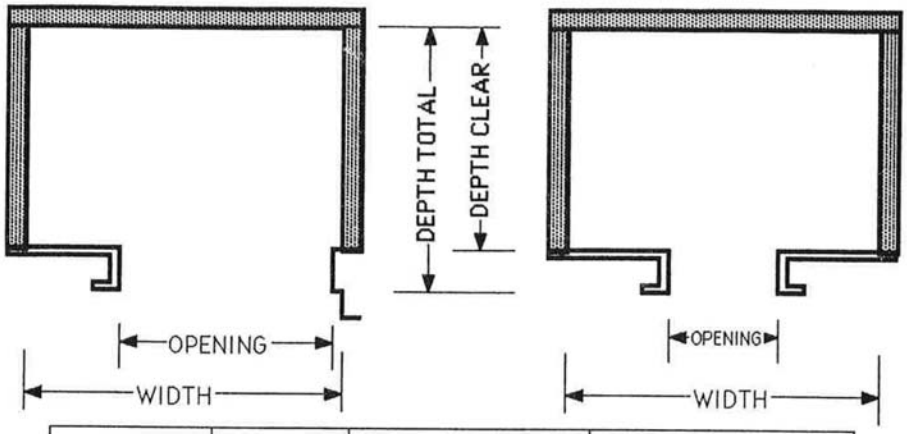

CAPACITY LBS.	WIDTH	DEPTH		OPENING	
		TOTAL	CLEAR	S/SLIDE	C/O
2000	68"	54"	51"	*36"	---
2500	80"	54"	51"	**42"	*42"
3000	80"	60"	55"	**42"	*42"
3500	80"	68"	63"	**42"	*42"
4000	92"	68"	63"	---	**48"

* THIS COMBINATION OF CAR SIZE AND DOOR OPENING PERMITS TURNING A WHEEL CHAIR.

** THIS COMBINATION OF CAR SIZE AND DOOR OPENING PERMITS TURNING A WHEELCHAIR AND ACCOMMODATES A 76" X 24" AMBULANCE TYPE STRETCHER IN THE HORIZONTAL POSITION.

ARCHITECTURAL DATA ENTRANCE INFORMATION

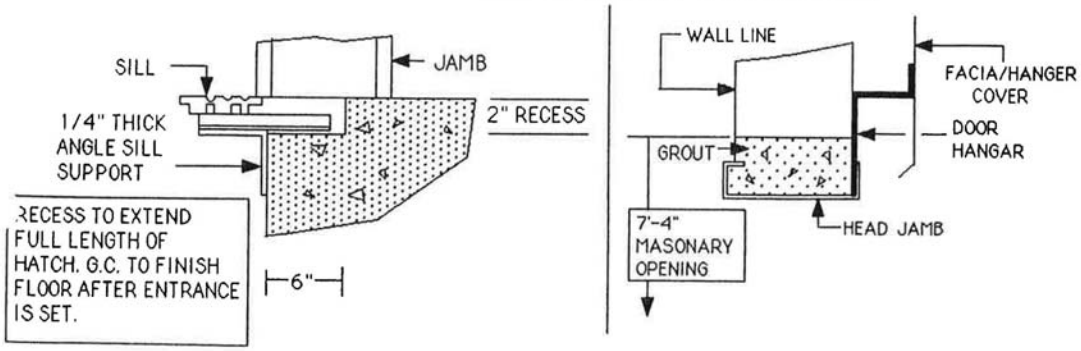

ARCHITECTURAL DATA

LAYOUT ELEVATOR MACHINE ROOM

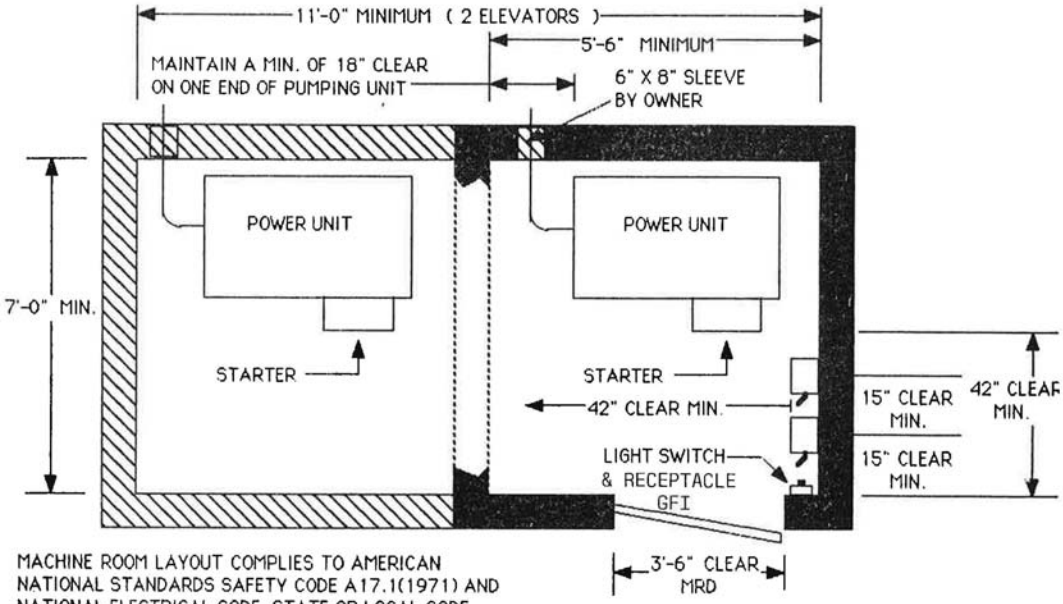

MACHINE ROOM LAYOUT COMPLIES TO AMERICAN NATIONAL STANDARDS SAFETY CODE A17.1(1971) AND NATIONAL ELECTRICAL CODE. STATE OR LOCAL CODE MUST BE MET IF MORE STRINGENT.
OWNER TO PROVIDE THE FOLLOWING WHICH MUST MEET THE GOVERNING CODE OR AUTHORITY.

NOTE: THE PREFERRED AND IDEAL LOCATION OF THE MACHINE ROOM IS BEHIND THE ELEVATOR HOISTWAY.

MACHINE ROOM SHALL HAVE A FIRE-RESISTANCE RATING EQUAL TO THE ELEVATOR HOISTAY (2 HOUR) RULE 101.1A

FLOOR SHALL BE SMOOTH AND LEVEL. RULE 100.3D

ONLY MACHINERY AND EQUIPMENT REQUIRED FOR OPERATION OF THE ELEVATOR SHALL BE PERMITTED IN MACHINE ROOM i e NO PIPING , DUCT WORK, VENT PIPES, ETC. RULE 101.2

MACHINE ROOMS REQUIRING STAIRWAYS OR ROOF PASSAGES SHALL MEET THE REQUIREMENTS OF RULE 101.3 . CONTACT FACTORY REPRESENATIVE FOR DETAILS.

MACHINE ROOM DOOR SHOULD BE AT LEAST 1-1/2 HOUR "B" LABEL. DOOR SHALL BE SELF-CLOSING WITH SPRING TYPE LOCK ARRANGEMENTALLOWING DOOR TO BE OPENED FROM INSIDE WITHOUT KEY HOWEVER KEY SHALL BE REQUIRED TO OPEN DOOR FROM OUTSIDE. RULE 101.3d MACHINE ROOM DOOR TO SWING OUT.

MACHINE ROOM SHALL HAVE A MINIMUM HEAD ROOM OF 7'-0" CLEAR FROM FLOOR TO OVERHEAD ITEMS SUCH AS LIGHTS ,WIRE DUCT, BEAMS, ETC. RULE 101.4

MACHINE ROOM SHALL HAVE A MINIMUM OF TWO (2) LIGHTS PROVIDING A MINIMUM OF TEN (10) FOOT CANDLES AT FLOOR LEVEL. THE LIGHT SWITCH SHALL BE LOCATED ON LOCK-JAMB SIDE OF THE DOOR. RULE 101.5a FLOURESCENT LIGHTS ARE RECOMMENED.

DUPLEX RECEPTACLES OF THE GROUND TYPE SHALL BE PROVIDED IN THE MACHINE ROOM. RULE 102.1c & NEC ART. 210

DISCONNECTS SWITCHES FOR ELEVATOR MAIN POWER SUPPLY, SIGNALS, AND CAR LIGHTING SHALL BE LOCATED IN MACHINE ROOM AS SHOWN. DISCONNECTS SHALL BE THE FUSED TYPE AND PROVIDE MEANS OF LOCKING THE SWITCH IN THE OPEN POSITION. RULE 210.5 a NEC ART. 620-51

MAIN LINE DISCONNECT FUSES SHALL BE "CURRENT LIMITING" TYPE AND SHALL BE PROPERLY SIZED FOR THE LOAD AND RATING OF THE DISCONNECT SWITCHES .
NEC ART. 240-11AND 240-60

MAIN LINE FEEDER WIRES SHALL BE PHASE IDENTIFIED IN THE MAIN LINE DISCONNECT SWITCH AND AT CONTROLLER TERMINALS .
NEC ART. 200

MACHINE ROOM SHALL BE PROVIDED WITH NATURAL OR MECHANICAL VENTILATION TO AVOID OVERHEATING OF THE ELECTRICAL EQUIPMENT AND INSURE SAFE AND NORMAL OPERATION OF THE ELEVATOR . VENTS SHALL HAVE FUSED LINK AND SUITABLE HARDWARE MESH TO PREVENT THE ENTRY OF BIRDS AND INSECTS. RULE 101.5d

MACHINE ROOM SHALL NOT BE USED FOR STORAGE. RULE 101.6
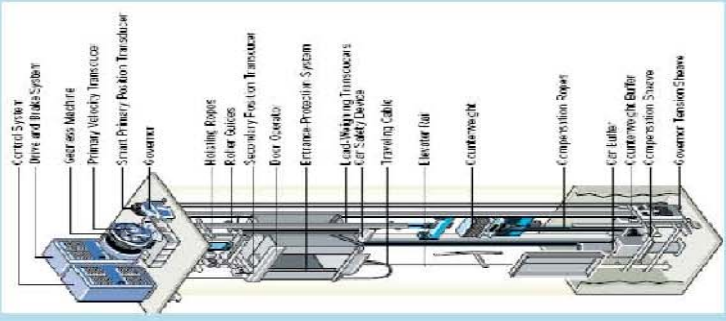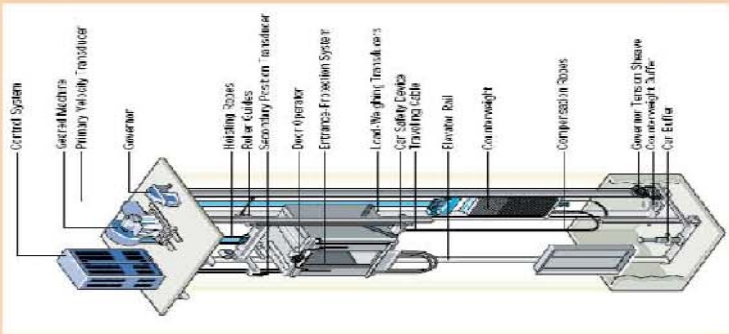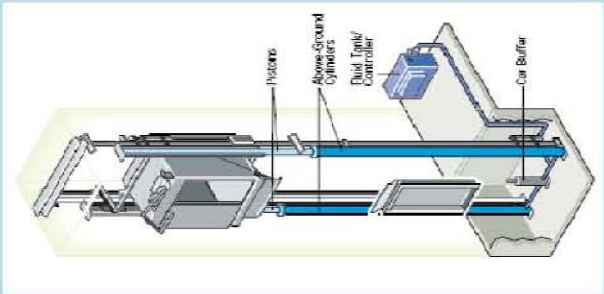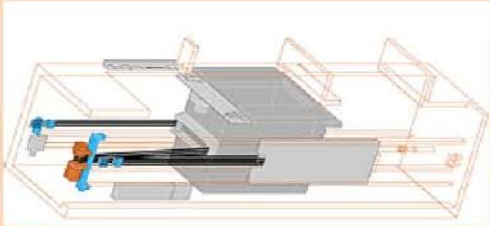
Types of Elevator / Description	Gearless Traction Electric Elevators	Geared Electric Elevators	Hydraulic Elevators	Machine Roomless Elevators (MRL)